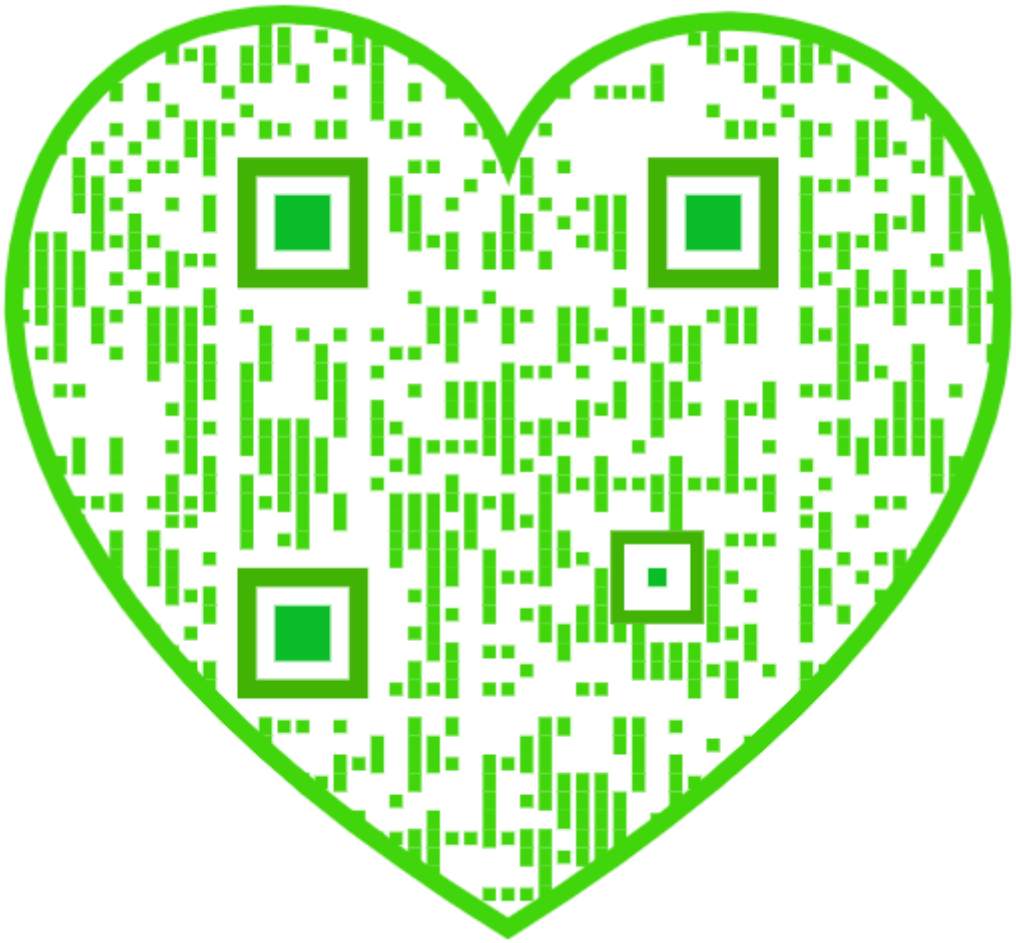

Northeastern University
Library

SECTION. DIVISION.
TG. 315. S-2

TYPES AND DETAILS OF BRIDGE CONSTRUCTION

PART II. PLATE GIRDERS.

EXAMPLES OF CONSTRUCTED RAILROAD AND HIGHWAY SPANS.

Describing and illustrating the essential features of calculation, design, and manufacture of plate girders in the United States, with analytical and practical discussions by bridge, consulting, and manufacturing engineers.

Recorded and Classified for Students, Instructors, Designers, Engineers, Architects, Officials, Builders, and Contractors.

By FRANK W. SKINNER, M. Am. Soc. C. E.

Consulting Engineer. Associate Editor The Engineering Record. Non-Resident Lecturer on Field Engineering at Cornell University.

NEW YORK
McGRAW PUBLISHING COMPANY
114 LIBERTY STREET
1906

Copyrighted, 1906
by the
McGraw Publishing Company
New York

To the Engineers

WHO HAVE DESIGNED AND BUILT THE STRUCTURES HERE DESCRIBED, AND HAVE DEVELOPED THE PRESENT HIGH STANDARD OF AMERICAN PRACTICE, WHO HAVE FREELY CONTRIBUTED THE DATA HERE USED, AND IN MANY INSTANCES REVISED AND VERIFIED IT, THE MERIT OF THIS VOLUME IS DUE.

158602

PREFACE

TYPES AND DETAILS OF BRIDGE CONSTRUCTION

It is the purpose to present in *Types and Details of Bridge Construction*, the development of advanced practice and its principal details, to illustrate structures adapted to different conditions, to show the progress from primitive and obsolete construction to the most recent designs in accordance with latest requirements and improved manufacturing facilities, and to record interesting, important, and typical examples so that their principal data are easily accessible.

The first consideration in the selection and preparation of data has been to secure examples fully covering the range of dimensions, capacities, and types for the different conditions and requirements under which plate girders are used for bridge work, to describe them concisely, and to clearly present any special or important features. Care has also been taken to give many parallel examples of the most important classes of plate girders, so as to show the differences and similarities of independent designers for corresponding service as well as the features due to different requirements.

Examples of early work are given to show the development of designs corresponding with the growth of traffic, the improvement of analytical and mathematical operations, the change from wrought iron to steel, and the great development of bridge-shop and rolling-mill practice. Still other examples of curious or absurd girders show the ingenuity or ignorance of the builder, or the peculiar conditions sometimes encountered.

The examples presented have been selected because of their interest, and not necessarily because they are approved as models; the particular structures described may or may not be considered as in accordance with good practice. Criticism, in general, even when obvious, is avoided. The presentation of any detail does not necessarily imply that it is endorsed, but merely that it is considered typical or interesting as an example of actual construction.

The book is arranged in parts, each dealing separately and completely with a distinct portion of the subject. First, the

general features of plate girders are outlined, their loadings and methods of calculation reviewed, the essential requirements of leading specifications noted, methods of design explained and illustrated, well-developed systems of making and preserving drawings and records are given, present construction and erection methods are described, and data are given of full-sized practical tests.

In succeeding parts numerous examples are given of bridges, most of them of recent construction, for the leading railroads in America, including straight and skewed through and deck spans of from one to four tracks, especially those of from 80 ft. to the practical maximum of 128 ft., with numerous examples which show location, conditions, requirements, general dimensions, materials, the principal structural features, and any special details or deviations from ordinary practice, thus covering most of the features involved in standard railroad designs and the differentiations due to individual design, and varying shop practice.

Multiple spans, generally designed in sequence and supported on high towers, are grouped separately, and include approaches to great truss spans, track elevations, crossings of wide valleys, famous viaducts, those of great heights, and some which have been built under great difficulties by Americans in foreign countries.

In these descriptions, all parts of the structures are clearly described and illustrated by diagrams where necessary, and by elevations and details when special points require it, but the variations in the most important details are also shown to larger scale with abundant views in a series of separate descriptions of bearings, splices, etc., which include about all the elements of design, which are much differentiated, and are very carefully classified and arranged to permit of comparison and easy grouping of all similar details together.

Long-span highway girders and special structures, including aqueduct bridges and cantilevers, but excluding arches which have been presented in a previous volume, are, together with miscellaneous and curious girders, arranged in Part V.

The whole concludes with a series of discussions by eminent engineers and builders of great experience and ability, which review the features of plate girder use and construction, explain those which they consider the most important, describe methods of computation and design, features of shop and mill practice

and service, and practically epitomize their own practice. In connection with the abundant examples of plate girders that have been built by the best designers and builders, these disinterested expert conclusions are of the greatest value, and add vastly to the usefulness of the book.

Many of the descriptions and drawings are revised or reprinted from those written by the author, and published within the last fifteen years in *The Engineering Record;* others have not been before published, and are prepared from data furnished by their engineers especially for this purpose, or from notes and sketches made by the author; a few have been prepared from technical publications and professional papers. Wherever adequate data exists in other publications, references are given to them in the text or in the index. Credit to the designers and builders has been very reluctantly omitted on account of the impossibility of deciding, in some instances, between conflicting claims, and in many instances the difficulty of securing any credit for structures which it would seem unjustifiable to ignore while giving credit to less important or less excellent ones.

Consistent effort has been made to make this book a complete epitome of American practice in plate girders, to describe as many important examples as possible, to accompany them with a comprehensive review of ordinary conditions, requirements, methods and explanations of the computations, design and execution of the work, and to arrange the data so as to present a complete record for reference and consultation, useful for design and estimate, and especially for convenient illustration and comparison of plate girder essentials, for guidance, suggestion, or modification in new work. It is not intended as a text-book, but rather as an adjunct to the excellent mathematical and scientific college text-books, which so ably demonstrate the analytical and graphical methods of stresses and the fundamentals of proportioning, and to be of value to the practical man requiring examples and precedents.

The author's part has been largely that of compilation, and his sincerest thanks are tendered to the many friends who have assisted with valuable data, revisions, and written contributions, viz., Messrs. F. H. Bainbridge, Bernt Berger, G. A. Berry, J. Berry, A. W. Carpenter, C. B. Clark, J. J. R. Croes, A. C. Cunningham, J. S. Deans, W. H. Finley, J. B. French, J. E. Greiner, H. W. Hodge, Olaf Hoff, W. Hunter, W. M. Hughes, H. S. Jacoby, G. W. Kitteredge, D. W. Lum, C. B. Loweth, C. M. Mills, C. N. Mon-

sarrat, A. W. Munster, Ralph Modjeski, G. H. Pegram, J. V. W. Reynders, J. W. Schaub, J. P. Snow, M. R. Strong, J. A. L. Waddell.

That this book may be of value to students, instructors, designers, engineers, architects, manufacturers, draftsmen, and contractors is the hope that has accompanied the labor of its preparation.

FRANK W. SKINNER.

TOMPKINSVILLE, N. Y., *January, 1906.*

CONTENTS

PAGE

PREFACE v

PART I.

GENERAL FEATURES OF DESIGN CONSTRUCTION AND SERVICE 2

CHAPTER

I. American Plate Girder Bridges 3
General Types. Proportions and Materials. Bearings. Floor Systems. Bracing.

II. Calculations. Formulæ and Loading 7
Calculations and Stresses. Economical Depths. Live Loads. Shipping.

III. Specifications 11
Railroad Spans. Trolley Car Spans. Highway Spans.

IV. Discussions of Methods of Designing 15
Weights. Unit Stresses. Web Stiffeners. Flanges, Waddell, Fulton, Swift, Nichols.

V. Typical Strain Sheet and General Design 18

VI. Drawings and Records 21
American Bridge Co. Standards. Rules and Drawings. — Size, Scale, Arrangement, Notes, Views, Sectioning, Rivets. Conventional Signs.— Connections, Figures, Keys, Data, Marking, Shipping, Rivet-heads, Conventions, Spacing, Stiffeners, Sizes, Grades, Anchors, Omissions, Sectional Drawings, Plans, Masonry, Bottom Plan, Sway Frames, Horizontal Section, Erection Jaws, Sequence, Laterals, Supports, Anchors, Standards. HIGHWAY BRIDGE STOP RULES. Preliminary, Masonry Plans, Size of Drawings, Views, Notes, Markings, Titles, Arrangement, Shipping, Beams and Stringers, Riveting, Shop Bills, Allowance. Standards. Filing and Indexing Tracings.

VII. Construction and Erection 36
Shop Work. Handling and Transporting. Unloading. Erecting. Shipping a 71 ton Girder. Shipping Two 105 ft. Girders.

VIII. Tests of Full Size Girders 43
Boller's Hydraulic Test. Tarbes Destruction Test.

PART II.

EXAMPLES OF RAILROAD PLATE GIRDER SPANS 49

IX. Spans of 25 to 80 feet 51
Marent Gulch, Oak Lane, Père Marquette, Woodsville, Wanda, Erie No. 421½, Chew Street, Forest Park, Bethlehem Junction.

CHAPTER PAGE

X. Spans of 84 to 106 ft. 71
Lebanon Valley, Grand Trunk, Oriskany, Reading Belt, Ship Pond Stream, Worden, Bridgeport, Sixteen Mile Creek, Newark.

XI. Spans of 109 to 114 ft. 93
Monocacy, Clyde, Yellow Creek, Janesville.

XII. Spans of 115 feet and upward 103
Chicago Terminal Transfer, Maiden Lane, West Shore No. 454, Erie No. 7, Pine Creek.

PART III.

DETAILS OF BEARINGS AND SPLICES 123

XIII. Simple Fixed End Bearings 124
Erie R.R. Standards, New York Central R.R. Standards, Northern Pacific R.R. Standards, Canadian Pacific R R. Standards, Oriskany, Forest Park, Fern Hollow, Harvard, Marent Gulch, Woodsville, Eighteen Mile Creek, Jersey City, Pine Creek, Plum Creek, Albany, Fraser River, Brooklyn Elevated R.R. Standards.

XIV. Simple Sliding End Bearings 135
New York Central R.R. Standards, Union Pacific R.R. Standards, Bridesburg, Williamsburg, Atlantic Ave., Streets Run, Des Moines River, Mill Creek, Gokteik, Traction Company's Crossing....

XV. Pocket Expansion Bearings 145
Kinzua, Williamsburg, Fern Hollow, Asylum Street, Delaware, Lackawanna & Western R.R. Standards, Manhattan Elevated R.R. Standards, Chicago Elevated RR. Standards, Suburban Rapid Transit Elevated R.R., Manhattan Elevated R.R., Fordham Extension.

XVI. Plain Roller Bearings 153
Oriskany, Erie R.R. Standards, Grand Trunk R.R. Standards, Canadian Pacific R.R. Standards.

XVII. Flange Bearing Pedestals 157
Boller & Hodge Standards, Armour Ave., Newark, Union Pacific R.R., Baltimore & Ohio R.R.

XVIII. Pin-Bearings in Cast Expansion Shoes 161
Erie R.R. Standards, Boller & Hodge Standards, Bridge No. 7, Erie R.R., Lebanon Valley, Clairton, East Omaha, Baltimore & Ohio R.R., Chicago, Milwaukee & St. Paul R.R. Standards, Northern Pacific R.R. Standards, Erie R.R. Standards.

XIX. Pin Bearings in Riveted Expansion Shoes 170
Newark, Mingo, Clyde River, Maiden Lane, Bethlehem Junction, Richmond, Worden, Pine Creek, Riverside Drive, Union Pacific R.R. Standards, Northern Pacific R.R. Standards.

XX. Pin Bearings in Cast Fixed Shoes 184
Boller & Hodge Standards, Omaha, Clairton, Southwestern Ave. Boulevard, Baltimore & Ohio R.R.

XXI. Pin Bearings in Riveted Fixed Shoes 189
Chicago Terminal Transfer R.R., Bridgeport, Yellow Creek, West

CHAPTER PAGE

Shore R.R. No. 454, Mingo, Maiden Lane, Chicago, Milwaukee & St. Paul R.R., Clyde, Newark, City Island, Union Pacific R.R.

XXII. Deflection Bearings 198
Janesville, Rockford, Des Moines, Boone, Vernon Ave., Chicago Great Western R.R., Northern Pacific R.R., Wabash R.R., Canadian Pacific R.R. Standard, Northern Pacific R.R. Standard, Atchison, Topeka & Santa Fé R.R. Standard, New York Rapid Transit R.R.

XXIII. Miscellaneous Bearings 205
Fort Point, Harvard, Chicago Terminal Transfer Co., Consolidated Traction Co., Chicago, Milwaukee and St. Paul R.R., Terre Haute Bridge.

XXIV. Web and Flange Splices 216
Harvard, Kinzua, Grand Trunk R.R. Worden, Sixteen Mile Creek, Clyde River, Lehigh Division, New York Central No. 454, Rankin, Pine Creek, Bradford No. 7, Armour Ave.

PART IV.

MULTIPLE RAILROAD SPANS ON STEEL TOWERS 228

XXV. Viaducts 230
Eighteen Mile Creek, White Water, Uganda, Fort Dodge, Boone, Portage, Kinzua, Gokteik, South St. Paul Double Track Belt R.R.

XXVI. Approaches 260
Rankin, Bridesburg, Clairton, Fraser River, Williamsburg, Hudson River, Albany.

XXVII. Track Elevations 289
Jersey City, Park Ave. Improvement, Southwest Ave., Boulevard 9 Track Structure, Detroit Union Depot, Chicago, Atlantic Ave. Improvement, Merchants' Bridge, Newark.

PART V.

HIGHWAY AND SPECIAL SPANS 316

XXVIII. Long Highway Spans 318
Sixth St., Philadelphia, Fort Point, Wabash River, Terre Haute. Croton, Riverside Drive Viaduct, Mill Creek, Cincinnati.

XXIX. Plate Girder Aqueduct Spans 332
Trenton, Port Byron, Briere.

XXX. Cantilever Spans 341
Van Buren Street, Chicago, Benton Boulevard, Riverside Drive, Electric Car Newark, St. Louis, Keokuk & Northwestern.

XXXI. Miscellaneous Examples of Plate Girder Construction 358
Old Baltimore & Susquehanna R.R. Span, Old New Brunswick Span, Apache Cañon and Royal Gorge Bridges, Mad River Bridge, Kansas City, Memphis & Fort Scott Bridges, Swannanoa River Bridge, Gaspee Multiple Track Bridge, Wellsville Bridge, Wooden Plate Girders, Tervuerin Portal Span.

PAGE

PART VI.

DISCUSSION OF PLATE GIRDERS BY EMINENT DESIGNERS. 376

Computations Required in the Design of Plate Girders, by H. S. Jacoby. General Design and Rules, by J. A. L. Waddell. Fundamental Considerations in Plate Girder Practice, by H. W. Hodge. Essentials of Plate Girder Spans, by J. V. W. Reynders. Some Features of Plate Girder Construction, by John Sterling Deans. Plate Girder Construction for R.R. Bridges, by J. B. French.

PART I

GENERAL FEATURES OF DESIGN, CONSTRUCTION, AND SERVICE

BRIDGE CONSTRUCTION

CHAPTER I

AMERICAN PLATE GIRDER BRIDGES

General Types. — Plate girders, including deep rolled I-beams, are the simplest possible bridges, and are extensively and increasingly used both for highway and railroad short spans. They are very solid and rigid, easily erected, economically manufactured, and never require adjustment after completion. On the other hand, they are sometimes unsightly, sometimes involve objectionable rivets, and when the spans are very long require special plant for riveting and handling them, are likely to be difficult to ship, and weigh more than a truss or lattice girder of the same carrying capacity. The simplest type of plate girder has a rectangular web, parallel pairs of top and bottom flange angles, with or without flange cover plates, vertical end and intermediate web-stiffener angles, and rests on flat plates riveted to its lower chord flanges and bolted to the masonry, or set on nests of rollers, or is supported by rivets through the outstanding flanges of its end-stiffener angles. A common example is the ordinary track stringer. Where the construction differs materially from this, often the variations only are here described.

All but an insignificant percentage of the plate girder spans in the United States are for railroad and highway traffic, and a very large proportion of them are made of medium steel, and are under seventy-five feet in length. Up to about 1885, they were made from wrought iron, but since that time structural steel shapes and plates have superseded iron in bridge work, and many of the old iron bridges have been replaced by steel ones, so that, unless noted to the contrary, steel bridges will be referred to in these pages.

The elementary type of plate girder span has two main longitudinal girders with solid continuous vertical web plates and T-shape parallel horizontal flanges. They are either deck or through spans, the former supporting the floor directly on the top flanges, and the latter by floorbeams connected to their webs. Deck span girders are usually braced together by transverse diagonals in vertical planes, called sway frames, and by horizontal lateral diagonals in the planes of the top and bottom flanges. Through girders are usually knee-braced transversely by the floorbeam connections or special gusset plates, and have bottom flange lateral diagonals. In either system one set of lateral diagonals may be replaced by some kind of solid floor construction. In short spans the flanges and web plates are usually single full length pieces, and the webs are stiffened by pairs of vertical angles riveted to opposite sides at each end.

Very short spans are fixed to their supports at both ends; longer spans have provision made at one end for longitudinal temperature displacements, and should be provided with some type of bearings designed to maintain uniformity of pressure on the masonry bridge seats irrespective of girder deflections. With very long or wide spans the construction becomes more elaborate. The stresses in plate girders are somewhat indeterminate, and the weight of materials is generally in excess of the theoretical amount required except in very short spans, but they are largely used instead of latticed or truss spans on account of their simplicity, ease of construction with ordinary facilities, durability, convenience in shipment and erection, and because of their more effective mass and rigidity, and that they are less liable to injury by accident, and are often best adapted to positions where the clearance is very small. For these reasons they are generally used for spans of from 20 to 100 ft., sometimes for spans up to 130 ft., and almost exclusively for spans of 30 to 60 ft.

Specifications for the design of plate girders have been published by most of the principal railroads, by bridge manufacturers, and by bridge engineers in private practice. They generally include the principal requirements for riveted structural steel work and for standard shop practice, and vary considerably in details and in the methods and assumptions of calculations. The general features of some of the best and most recent specifications conform substantially to the following outline.

Proportions and Materials. — The depth of the girder is usually from $\frac{1}{8}$ to $\frac{1}{15}$ the length; the distance between centers of girders not less than six feet; effective depth the distance between centers of gravity of top and bottom flanges; effective span distance between centers of bearings. All principal material is usually medium open hearth steel (tensile strength from 60,000 to 68,000 pounds per square inch), minimum thicknesses of material from $\frac{1}{4}$ in. in highway construction to $\frac{3}{8}$ in. in railroad work. Pieces more than $\frac{3}{4}$ in. thick to be subpunched and reamed and to have sheared edges planed.

Riveting, Splices, and Reinforcement. — Rivets generally $\frac{7}{8}$ in. diameter, sometimes $\frac{3}{4}$ in. in highway bridges, or 1 in. in heavy flanges. Field rivet holes for floorbeam or stringer connections reamed to iron template; excess of 25 per cent allowed for field-driven hand rivets. Rivet spacing not less than three diameters and not more than 6 in. Turned bolts used for field connections inaccessible for driving rivets. Web plates and flange materials are made with the fewest possible splices; web splices are made with from two to six vertical rows of rivets in two cover plates, and sometimes with pairs of additional top and bottom horizontal plates.

Flange angle splices are usually staggered on opposite sides of the web and are made with cover angles or plates or both. Flange cover plates are usually spliced by the projecting ends of the outside plates. Floorbeam, sway brace, and kneebrace connections are usually made to the outstanding flanges of vertical web-stiffener angles. Web plates are sometimes cut with their upper edges longer than their lower edges to give a camber to the girder, and care is usually taken to make their height slightly less than the distance from back to back of the flange angles.

In all except short spans of very light girders the web is usually reinforced by pairs of vertical stiffener angles on opposite sides, spaced not farther apart than the depth of the girders or a maximum of five feet, or a distance determined by special formula, and is reinforced by additional stiffener angles on centers of bearings and of concentrated loads. The web plate is of uniform thickness throughout, or increases in thickness from the center to the ends, and is sometimes reinforced by side plates in the end panels, always being proportioned to resist maximum shear and buckling and to afford sufficient bearing value for the rivets. Stiffener angles are offset ("crimped") over the vertical legs of the flange angles or are fillered flush with them, the latter

being usually the case at the ends and at points of connection to floorbeams and at web splices. Their ends are often fitted to accurate bearing against the horizontal legs of the flange angles.

Bearings. — End bearings are usually flat planed sole plates for short spans, and are bolted directly to the masonry, to bed plates, or to pedestals which distribute the pressure over an increased area. For spans above 30 or 40 ft. and under 50 to 80 ft. the expansion end usually slides on the bed plate; above these lengths it is seated on rollers or their equivalent. Deflection is usually neglected in short spans, and is provided for in long spans by pin or knife edge bearings or their equivalent. Transverse stresses are transmitted to the substructure at the expansion end through anchor bolts in slotted holes, by friction and by longitudinal guide ribs on the shoes, pedestals, and bed plates.

The shoes or pedestals at the fixed ends are usually made higher than those at the expansion ends, or are seated on bolsters to compensate for the height of the expansion end rollers and bed plates and to allow the masonry seats to be all kept at a uniform elevation. Pedestals and bed plates are seated on the carefully leveled surface of the masonry, or are grouted, or are set on a thin sheet of soft lead.

Floor Systems. — Railroad bridge floors are made with stringers and ties; with no stringers and with ties laid directly on the top flanges of the girders, with buckle plates; with flat plates on I-beams; with troughs of various sections; with transverse I-beams and with concrete slabs. Highway floors are made with planks and wooden or steel joists; with planks or buckle plates or flat plates and standard or special pavements; with brick arches; and with concrete arches or slabs. Sidewalks are often carried on brackets or on the cantilever ends of floorbeams seated across the top flanges of the floor-beams.

Bracing. — Lateral diagonals, transverse struts, and sway braces are usually single angles or pairs of angles riveted together back to back. Lateral angles are generally field-riveted through horizontal connection plates to the girder, floorbeam, and stringer flanges. The horizontal and X-brace angles in each sway-brace frame are usually riveted together at the shop and field-riveted to the vertical web stiffeners of the main girders. Gusset plate kneebraces are usually the full depth of the girder web, and often are made integral with the floorbeam web by shop-riveted cover splices to the latter.

CHAPTER II

CALCULATIONS, FORMULÆ, AND LOADING

Calculations and Stresses. — Bending moments and shearing stresses are easily calculated by the standard analytical and graphical methods, and the location of vertical web stiffeners and sizes of expansion rollers are calculated by various special formulæ. Some specifications contain tables of moments and shears for specific loadings, and many of them have tables of floorbeam and stringer moments, and shears and rivet values in bearing and shearing. The flanges are proportioned to take all the bending moments and the web to take all the shear, and the rivets in the flange and web connections are proportioned to take all the increments of moment in given spaces. A rule given by Theodore Cooper makes the pitch of flange rivets equal to the allowed stress on one rivet, multiplied by the depth of the girder and divided by the vertical shear at the required point.

For impact, an allowance is made of 25 per cent of maximum live loads or by special formula. For wind stress 30 lbs. per sq. ft. of exposed surface plus 150 lbs. per lin. ft. live load, or 50 lbs. per sq. ft. only, whichever is the greatest. For longitudinal stress the momentum produced by suddenly stopping the car, assuming sliding friction of wheels on rails at 0.2. For computing dead loads, the weight of timber is assumed at 4 lbs. per ft. b. m., stone concrete 130, cinder concrete 100, paving brick 150, sand 100, asphalt 90, and granite 160 lbs. per cu. ft.; rails, fastenings, splices, and guard timbers of tracks resting on cross-ties, 100 lbs. per lin. ft. of track; steel, 3.4 lbs. per sq. in. per lin. ft.

In some cases the web plates are assumed not to take any bending stress, and in other cases it is assumed that $\frac{1}{8}$ of the section of the web is included in each flange section. The flanges are proportioned to have as large a part as possible up to at least one-half of their gross cross-sectional area composed of angles, and not to have too long rivets or too wide cover plates. For this reason, in long-span bridges, they are some-

times made with two pairs of angles and with vertical side plates as well as horizontal cover plates. Both top and bottom flanges are usually made with the same gross section, and care is taken to stay the top flanges laterally at certain minimum distances. Maximum tension, compression, shearing, bearing and flange unit stresses, and loads on stone and concrete masonry and roller beds are specified, and are usually higher for highway than for railroad bridges. All designs should be approved by specialists, and their construction inspected under their direction.

Economical Depths. — New formulæ for the economical heights of plate girders are explained by Mr. Henry Szlapka in a communication to *The Engineering Record*, published March 27, 1897. He says:

"They have been checked and revised by my father, Mr. P. L. Szlapka, Engineer of Construction for the Phœnix Bridge Company, and have, I believe, considerable practical value. I have used the formulas in many cases of girders as they occurred in practice, and have found them give good results. They are more correct and simpler than those given in text-books.

"It is evident on a little consideration that the most economical height of a plate girder is such as to make the weight of the web plate plus the stiffeners with their fillers, if any, equal to the weight of the chords or flanges. For if the height of the girder is increased, the weight of the web and stiffeners increases while that of the flanges decreases, and vice versa, therefore the condition of economy will be the balance of the two component parts of the girder, the web, and flanges.

"Let L = length of girder in feet.
M = total bending moment in foot-pounds.
V = total end shear.
S = allowed tension per square inch for the flanges.
S_1 = allowed strain per square inch for shear in web plates.
h = height of girder back to back of L's in feet.
a = the weight of stiffeners and fillers expressed in percentage of the weight of web plate.

"The formulas are based on the following assumptions: first, that the area of the compression flange is made equal to the gross area of the tension flange; second, that the gross section of the tension flange is equal to seven-sixths the net area required;

that the height h is equal to the distance between centers of gravity of the flanges, which assumption is realized in heavy girders with several cover plates and closely approached in all other cases. The majority of plate girders are designed on the first assumption, and the areas actually used correspond very nearly to the second assumption. In most cases occurring in practice, the area of web plate is by about 50 per cent greater than required by end shear; therefore the area of the web plate will be expressed by

$$A_1 = \frac{1.5\ V}{S_1}.$$

In some specifications no part of the web plate is allowed to be counted as effective flange area; others allow the web to be counted. The amount of web acting with each flange is theoretically one-sixth of its net area, or a gross amount of about one-ninth; therefore the amount due from the web plate to both flanges equals

$$\frac{2 \times 1.5\ V}{9 \times S_1} = \frac{V}{3\ S_1}.$$

In a girder with cover plates the average gross area will about equal the net area required. With these remarks premised, we can develop our formulæ as follows:

"Case I. — One-ninth of web allowed as flange area; no cover plates: $h = L \div 8$.

. . . . . .

"Case II. — No allowance made for web; no cover plates: $h = 7\ L \div 48$.

. . . . . .

"Case III. — One-ninth of web allowed as flange area; girder with cover plates: $h = 3\ L \div 28$.

. . . . . .

"Case IV. — No allowance made for web; girder with cover plates: $h = L \div 8$."

. . . . . .

Live Loads. — Railroad bridges are usually proportioned for two coupled locomotives followed by a train load, all of the maximum weights used or anticipated on that line; they are also proportioned for horizontal transverse wind pressure resisted by the top and bottom lateral diagonals or by the solid floor system, for centrifugal force in curved tracks, for brake action on moving trains, and a general allowance is often made for impact.

Different classes of highway bridges are well defined by a recent specification which provides for a concentrated load and for a uniformly distributed load of 100 lbs. per sq. ft. on all the floor surface not covered by the former for city bridges, suburban, interurban, and heavy country bridges. For city bridges the concentrated load is assumed to be 24 tons on two axles, 10-ft. centers and 5-ft. gauge, on each street-car track or on any part of the roadway; for suburban or interurban bridges the same track load and half as much on the same axles on any part of the roadway; on heavy country bridges the same concentrated floor load and a track load of 18 tons. For ordinary highway bridges, 80 lbs. per sq. ft. of total floor surface, or 6 tons on two axles. On spans for heavy electric railway, street railways only, 24 tons on two axles for each track, or 1800 lbs. per lin. ft. of each track up to 100-ft. spans. On spans for light electric railways only, 18 tons on two axles for each track, or 1200 lbs. per lin. ft. for span per track for spans up to 100 ft. Other loads for highway spans are 35,000-lb. and 21,000-lb. steam road rollers; 12,000-lb. horse roller; a 10,000-lb. wagon load on two 5-ft. gauge axles 8 ft. apart; two coupled 30,000-lb. electric motor cars with four axles in all, spaced 7–20 and 7 ft. apart; a train of 8-wheeled, 50,000-lb. electric motor cars, two of which have, together, 8 axles, spaced 6–16–6–12–6–16– and 6 ft. apart; a train of 80,000-lb. cars with same axle spacing; a train of 60,000-lb. coal cars, two of which coupled have together 8 axles, spaced 5–19–5–8–5–19–5 ft. apart.

Shipping. — Girders are usually riveted up complete in the shops, and shipped to the site loaded on flat cars with their webs in a vertical position and supported at each end on separate cars, firmly braced against overturning, and pivoted at one end. Sometimes, on account of handling or shipping they are shipped in two pieces, with web and flange field-riveted splices near the middle. Sometimes deck spans are riveted up with transverse and lateral bracing complete in the shops, and are shipped whole, ready to be deposited on the substructure. Surfaces in permanent contact are painted when assembled, and all parts are usually painted once at the shops and once after erection, different colors being used for the successive coats to insure thorough painting.

CHAPTER III

SPECIFICATIONS

A TABULATION or comparison of the principal requirements of the leading engineers and bridge shops and railroad companies would show many interesting features, and afford valuable suggestions for solving ordinary and special problems in the design and proportioning of plate girder work, besides giving many labor-saving helps ; but the magnitude and importance of such a consideration require a separate volume, and space does not permit even the enumeration here of the different valuable specifications which have been written. Their scope is indicated and some of the more important limits suggested by the preceding outline, and a few characteristic data of special or additional requirements from them follow, which have been selected from specifications chosen at random from important ones for railroad, trolley-car, and highway bridges.

Railroad Spans. — In the specifications of the Illinois Central Railroad Company, stresses are computed by the use of tabulated equivalent uniform distributed loads ; weight of track, 420 lbs. per lin. ft. ; wind load, 300 lbs. static and 300 lbs. moving, per lin. ft. ; unit stresses for single and double track spans, respectively, flanges, 10,000 and 14,000 lbs. ; laterals, 15,000 and 15,000 lbs. ; web shear, 5000 and 7000 lbs. Shop and field driven rivets, respectively, bearing, 16,000 and 10,670 lbs., shear 8000 and 5335. Roller bearing per lin. in., 450 X diam. roller in inches. Bearing per sq. in. on concrete, 250 lbs., or stone, 300 to 350 lbs. The pitch of rivets connecting flanges to web is $v \times d \div s$ where v is the value of rivet, d is distance between rivet lines and s is the shear.

All stiffener angles are fitted top and bottom, and uniform rivet spacing and gauging are carefully prescribed. Tables are given of the shearing and bearing values of rivets, of the bearing values of plates, and for the pitch of staggered rivets and the weights of through spans. Diagrams at a scale of 1 in. equals 20 ft. and 1 in. equals 500 lbs. are given for the equivalent uniform loads and for the approximate weights of different types of spans.

For single-track through spans the weight varies from 64,403 lbs. for 40-ft. spans to 128,019 for 70-ft. and 224,775 lbs. for 100-ft. spans. For double-track through spans, 117,252 lbs. for 40-ft., 230,736 lbs. for 70-ft., and 402,100 lbs. for 100-ft spans. For single track deck spans, 30-ft. 18,132 lbs., 70-ft. 68,952 lbs., 100-ft. 150,129 lbs. The loading in all cases consists of the equivalent for two 161½-ton locomotives with a combined wheel base of 104 ft., and each having four driver axles with 49,000 lbs. on each, and a train load of 4600 lbs. per lin. ft.

Trolley-Car Spans. — The Massachusetts Railway Commission's specifications for electric railway bridges recommends plate girders for spans of 30 to 70 ft., and either plate girders or riveted trusses for spans of 70 to 100 ft. Comprehensive provision for live load is made for three classes of bridges; for city, suburban, and country bridges the maximum being 1500 lbs. per lin. ft. of track, and the minimum of 80 lbs. per sq. ft. The lateral force to be provided for is 50 lbs. per sq. ft. on one and one-third times the vertical elevation of the structure and unloaded, and 30 lbs. per sq. ft. on one and one-third times the vertical elevation plus a vertical surface 10 ft. high and 40 ft. long.

Each flange area is considered to include one-eighth the gross web area. The top flange stress is reduced if the flange is unsupported for a length twenty times as great as its width. Flange plates must not project beyond their outer lines of rivets more than 5 in., or more than eight times the thickness of the thinnest plate. Multiple flange plates are of equal thickness, or decrease in thickness from the angles outwards. Web splice plates must have at least two vertical lines of rivets on each side of the joint.

Web plates must have stiffeners on each side, bearing on the flange angles at each edge of the bed plates and at all other points of concentrated loading. These stiffeners must be spaced and proportioned so that the total shear per sq. in. of the gross area of the web, including impact, shall not exceed $\frac{12{,}000}{1 + \frac{1}{3000}\frac{d^2}{t^2}}$, in which t = thickness of web in inches, and d = clear distance in inches, between stiffeners. The maximum stiffener spacing shall equal the depth between flange angles, but shall not exceed 5 ft. Rivets in stiffeners shall be suffi-

cient to carry the concentrated flange load to the web. Web rivets in parallel flanges shall be proportioned to transmit the maximum shear at any point in a distance equal to the depth of the girder. Sharp bends will not be allowed in compression flanges and in tension flanges only in special cases and when suitable stiffeners are fitted to the flange. When track ties are supported on bracket angles riveted to the webs of through girders, the horizontal flanges of these angles must not be more than 3 in. wide nor less than $\frac{5}{8}$ in. thick, unless they are supported by stiffeners not more than 30 in. apart.

Highway Spans. — Cooper's specifications for highway bridges require I-beams or plate girders for 20 to 40-ft. spans, and plate or lattice girders for 40 to 80-ft. spans. The top lateral bracing in deck bridges and the bottom lateral bracing in through spans is proportioned for 150 lbs. static and 150 lbs. moving wind pressure. The bottom lateral bracing in deck bridges and the top lateral bracing in through spans is proportioned for 150 lbs. static wind pressure per lin. ft. Temperature variations of 150 degrees are provided for.

The unit working stresses allowed for medium steel are: In tension, 18,000 lbs. for lateral and sway bracing, and 13,000 lbs. for bottom flanges; rivets 10,000 lbs. in shear, and 18,000 lbs. in bearing, except for floor system, 20 per cent less; sway and lateral bracing 40 per cent more, and field-driven rivets $33\frac{1}{3}$ per cent less. Tension stresses for soft steel, 10 per cent less, and compression stresses 15 per cent less than for medium steel.

Angles in tension must be connected through both flanges, or only one flange area is allowed. The depth of the girder is preferably not less than one-twentieth of the span. No part of the web plate is estimated as flange area. The spacing of web stiffeners does not exceed the depth of the girder or 5 ft., or wherever the shear exceeds $1200 - 90 \times$ (depth of girder web divided by its thickness). The unit stress allowed in web stiffeners is $12{,}000 - 55 \times$ (length $\div$ radius of gyration). Hand-driven rivets more than $\frac{7}{8}$-in. diameter are not allowed. Field rivets, except in lateral or sway connections, have their holes drilled or reamed through thick iron templates.

Web plates and angles are fitted and painted water tight at the ends. The widths of flange plates are limited, as is their cross-section, in proportion to that of the flange angles. Pressure on masonry must not exceed 250 lbs. per sq. in. Pressure

per lin. in. of rollers must not exceed diameter in inches multiplied by 300 lbs. Spans of less than 80 ft. shall have one sliding end. Spans of 80 ft. and over shall have hinged bearings at both ends, and be supported at one end on rollers of not less than $2\frac{7}{8}$-in. diameter.

Among the most important data to be furnished with specifications to bidders or designers, are, location, name of river or crossing, distance from railroad track, lengths of spans center to center piers, height of floor above flood and ordinary water level, ordinary depth of and flood depth of water, seasons of probable floods, character of river bed, skew and sizes of piers, width of roadway, number and spacing of car tracks, number and width of sidewalks, kind of floor, live load, relative position and dimensions of existing spans, if any, distance from lowest point of steelwork to highest point of floor, required clearances. Strain sheets should also give all leading dimensions, cross-sectional areas, and maximum stresses, rivet sizes and pitch, location and materials of splices. Directions for camber, end bearings, reaming, and fitting.

CHAPTER IV

DISCUSSIONS OF METHODS OF DESIGNING

Weights. — A paper entitled *Current Practice in the Designing of Plate Girders*, was presented to the Engineers' Club of Philadelphia, by Professor Edgar Marburg, March 3, 1894. It advocates the use of plate girders for all single-track spans up to 80 ft., and double-track spans up to 70 ft. It estimates that for a live load of two 100-ton engines followed by a load of 4000 lbs. per lin. ft., a deck lattice girder single-track bridge weighs about 500 lbs. per. lin. ft., and a corresponding plate girder bridge 650 or 525 lbs., if the usual requirements are modified within limits the author considers permissible.

Unit Stresses. — It considers that the usual value of 4000 lbs. per sq. in. for web shear is much too low, and that this amount may be safely doubled if the web is properly stiffened. With a single row of rivets at three diameters pitch and 12,000 lbs. bearing, the required web thickness will be about the same as is determined by proportioning the web for 4000 lbs. per sq. in. shear. The assumption that a computed mean intensity of shear of 4000 lbs. per sq. in. indicates a maximum unit stress of 6000 lbs. at the neutral surface, is not always true. Ordinarily, the maximum shear per sq. in. at the neutral surface is approximately equal to the mean shear computed by neglecting the flanges.

Web Stiffeners. — The determination of web stiffeners by the formula

$$s = \frac{a}{1 + \frac{d_2}{3000\ t^2}}$$

with values of 12,000 and 4000 for a and s respectively, and a limiting ratio of 125 for $d \div t$, although entirely empirical, does recognize that the tendency to buckle is some function of the shear, and is considered the most satisfactory method yet proposed.

Flanges. — Flanges should be designed with angles for at least half their area up to the largest available sizes. They

should be proportioned for net areas of live and dead loads of 7500 and 15,000 lbs. per sq. in. of net area for live and dead loads respectively. Compression flanges should be stayed laterally at distances not exceeding thirty times their width. The thickness of flange metal should not exceed four times the rivet diameter. The component due to vertical loading should not be neglected in determining the bearing of flange rivets in web plates, and the rivet pitch in the loaded flange should not exceed 4 in. Only $\frac{1}{8}$ of the cross-section of the web should be assumed to form part of the flange area. The web splices should have longitudinal plates riveted through the flange angles.

Mr. J. A. L. Waddell, in a paper published in the *Transactions of the American Society of Civil Engineers,* for February, 1892, emphasized the desirability of a series of tests to destruction of plate girders. He maintains that if properly stiffened by angles the webs of long, deep, single-track plate girders need seldom be more than $\frac{3}{8}$ in. thick. He believes that one-half the sectional area of the flange should be in the angles, and that there should not be more than two or three flange cover plates. He believes that most specifications neglect the proportioning of the end web-stiffening angles for girders supported on their bottom flanges, that both ends should be cut to bearing on the flange angles, and that the intensity of stress should be about 8000 lbs. He believes that the unsupported length of compression flanges, well braced by the ties, should be limited to thirty times their width, and that the flanges should be proportioned for bending moment on the assumption that one sixth the web area is effective there. He makes plate girder web splices with at least four vertical rows of rivets 3 in. apart in two 12 × $\frac{3}{8}$-in. plates, and splices the vertical legs of the flange angles with a long, narrow plate on each side.

Mr. John A. Fulton, in discussing this paper, maintained that plate girder webs should not be less than $\frac{3}{8}$ in. thick, and should be often much thicker for long, shallow girders. In all cases, the net area of the web should be sufficient to secure low unit stresses from the maximum vertical shear, and to afford sufficient bearing area for the flange rivets. The wall plates and end base plates should be carefully determined, and the load should be distributed over them by web-stiffener angles of ample projection. The base plate should be well riveted to the

flange angles, and the projecting portions should be calculated as beams loaded on the under side. As the deflection of the beam throws an excess load on the inner edge of the base plate, it should be made narrow and extend laterally.

Mr. A. J. Swift advocated the limits of 70 and 90 ft. respectively, as the maximums for double and single track plate girders, and stated that many years' maintenance of a large number of riveted bridges showed that the thickness of the materials was of great importance, and that the vibrations of a tension web member composed of heavy angles pried off the rivet heads much more than when the materials were thin. He advocated (in opposition to almost universal practice) the shipment of long plate girder spans in sections, and their assembling and field-riveting at splices on account of the danger of injury to the girders in transit, and the difficulties of erection of such long and heavy pieces. In a number of cases he had noted that the top flange angles were split where the web-stiffening angles were not properly fitted to bearing against them. In several years' experience, every failure of iron bridges was in the tension flanges of track stringers which had been strained to 15,000 lbs. per sq. in. at the point of fracture, while truss members had been strained to 22,000 lbs. per sq. in. hourly for years without any signs of deterioration.

Mr. O. F. Nichols considered an allowance of 4000 lbs. per sq. in. for shear in the webs of plate girders as conservative. The distance between vertical web stiffeners at the ends of the girders should be less than the depth of the girder and they should be considered as posts and the web as a tension diagonal only. Web plates from $\frac{1}{2}$ to $\frac{3}{4}$ in. thick would make stiffer and more permanent girders without materially increasing their cost, and would not be so seriously affected by corrosion.

CHAPTER V

TYPICAL STRAIN SHEET AND GENERAL DESIGN

In large bridge shops the shop-drawings for plate girder spans are detailed from the strain sheet which contains all the essential data, and the principal materials and arrangement are prepared by the engineering department to conform with contract requirements. From it the draftsmen elaborate the connections, rivet spacing, clearances, etc., to check with the leading dimensions in accordance with the governing specifications and the shop standards prevailing in the given works, always making simplicity and duplication first essentials, avoiding small fractions of an inch wherever possible, and concentrating them when unavoidable. An excellent example of a strain sheet which shows the determination of flange areas and is really a complete condensed design of a large plate girder bridge, is illustrated in a double-track through 110 ft. 9-in. span built in 1902 by the American Bridge Company for No. 76 of the Lehigh Division of the Lehigh Valley Railroad under the 1899 specifications of that railroad company.

The bridge is regular except that it is skewed equally at each end, and that the center line between tracks is on a curve the versed sine of which is bisected by the bridge axis, thus requiring offset positions of the stringers and a 3-in. elevation of the outer rail to correspond with the track curvature. The strain sheet diagrams are drawn to a scale of $\frac{1}{8}$ in. equals 1 ft., and are exactly as here reproduced except that the flange diagram and proportioning data for the floorbeams and stringers, which are similar to those for the main girders, are here omitted, and that some of the notes and materials written on the original drawing are here placed in the text to avoid confusion on the small scale engraving.

The live load consists of two 365,000-lb. locomotives followed by a train load of 5000 lbs. per lin. ft. The assumed dead load per lin. ft. is, track, 900 lbs., floor, 1320 lbs., girders, 1800 lbs. Maximum flange stresses per sq. in. are 9000 and 10,000 lbs. for main girders, stringers, and floorbeams respectively, and 5500 lbs. for shear. Bearing on the masonry is 300 lbs. per sq. in., and on the rollers per lin. in. is 350 lbs. multiplied by the diameter in inches.

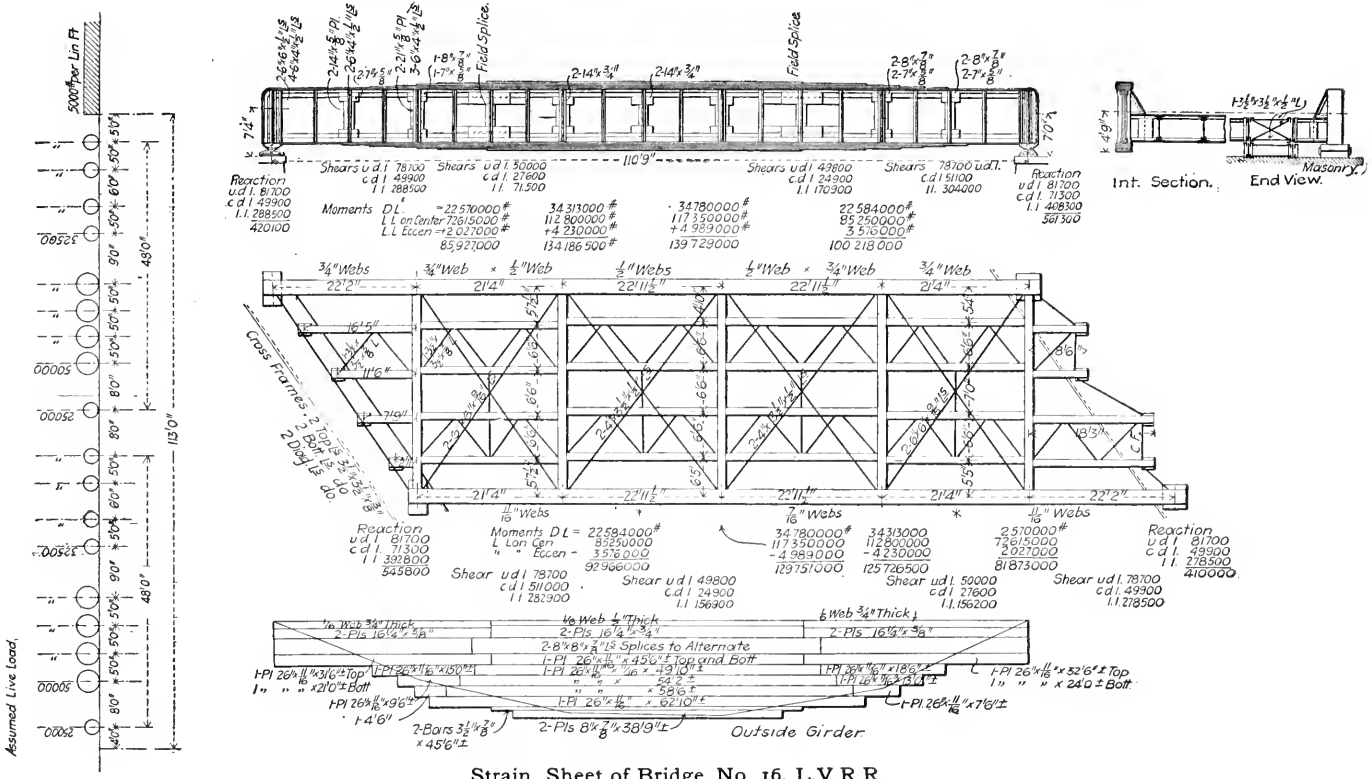

Strain Sheet of Bridge No. 16, L.V.R.R.

The girders are 9 ft. deep back to back of flange angles, and are connected by 46-in. plate girder floorbeams with kneebrace gusset connections to the vertical web-stiffener angles. They have pin bearings in cast steel half-hole shoes and pedestals which at one end are fixed and at the other are seated on expansion rollers. The ends of the pins have shoulders engaging the shoe and pedestal webs to lock them together and transmit lateral stress to the abutments. The tops of the shoes bear on the planed edges of the girder webs.

The shore ends of the stringers are seated on riveted pedestals, like very short sections of plate girders with $\frac{5}{16}$-in. webs. They are fixed at the abutment ends, where they are seated in pockets in the back wall masonry and are connected by transverse and oblique struts. At the pier ends they slide, and are connected by a single continuous diagonal horizontal strut parallel to the skew line. All stringers are made with a single 40 × $\frac{3}{8}$ in. web plate and 6 × 6-in. flange angles varying in thickness from $\frac{1}{2}$ to $\frac{5}{8}$ in. according to length.

The outside and inside girders (relative to the track curve) vary slightly on account of the track curvature, but the inside girder corresponds very closely to the outside one, which is here shown in elevation. The maximum moment is 139,729,000 in.-lbs., which being divided by 106 in., the effective depth, gives 1,318,200 lbs. flange stress, which being again divided by the unit intensity, 9000 lbs., gives 146.5 sq. in. net flange area required. This is made up by $\frac{1}{6}$ the area of the 108 × $\frac{1}{2}$-in.-web, two 16$\frac{1}{4}$ × $\frac{3}{4}$-in. and two 8 × $\frac{7}{8}$-in. side plates, two 8 × 8 × $\frac{7}{8}$-in. angles, two 3$\frac{1}{2}$ × $\frac{7}{8}$-in. bars, and five 26 × $\frac{11}{16}$-in. cover plates, making a total section of 169.79 gross and 146.04 net sq. in. The flange area required for the inside girder is 138.62 sq. in., and the actual area is 160.56 gross and 138,06 net sq. in., the difference being made by the reduction of the web plate to $\frac{7}{16}$ in. and the 26-in. cover plates to $\frac{5}{8}$-in. thickness.

The intermediate web stiffeners are pairs of 6 × 4 × $\frac{1}{2}$-in. angles on opposite sides of the web which are fillered out 1$\frac{5}{8}$ in. flush with the flange angles, and are not crimped at the floorbeam connections, and in other places are fillered $\frac{3}{4}$ in. and crimped $\frac{7}{8}$ in. All web plates are 108 in. long, and are made, as shown in the elevation, in ten pieces with seven joints shop-spliced and two field-spliced. The field flange splices are each made with two 8 × 8 × $\frac{7}{8}$-in. angles, two 20 × $\frac{7}{8}$ and two 12 × $\frac{3}{4}$-in. plates.

CHAPTER VI

DRAWINGS AND RECORDS

Practical Rules for Designing and Drawing Plate Girders.

THE American Bridge Company was formed in 1900 by the combination of about thirty bridge shops in the eastern part of the United States. Many of them were large plants, had been long established, possessed good shops, with labor-saving appliances and special machine tools, had developed well-perfected organizations and carefully studied methods of work, and were directed by engineers and superintendents who were skilled specialists in bridge-building. Many of the best of these men were retained in the new organization, and were consulted in the preparation of a set of standard rules and instructions which were issued in 1901 by the chief engineer to the designers and draftsmen of the different plants. This book was intended to secure uniformity and excellence in the work at different shops, to save unnecessary labor, to insure systematic conformity to the most approved practice, and to encourage the use of shop standards and approved methods by outside architects and engineers.

The instructions were especially adapted to the latest improvements in the methods and tools of bridge construction. They summarize the best results, and give the revised outline of the practice of some of the most able bridge-builders, and are of such value that an abstract of the principal rules and instructions is here presented, with acknowledgment to Mr. C. C. Schneider, vice-president, and Mr. Paul L. Wolfel, chief engineer, of the American Bridge Company. The book is entitled, *American Bridge Company Standards and Structural Details*, and includes trussed bridges, buildings, roof, beam and column work, many convenient tables, and other general information for the drafting room which is here omitted.

RULES FOR DRAWINGS.

Size of sheets, 24 × 36 in. Standard titles uniformly at lower right-hand corner.

Scale of detail drawings, $\frac{3}{4}$ in. or 1 in.; for large girders, $\frac{1}{2}$ in. or $\frac{5}{8}$ in.

Arrangement. — Members detailed in position they occupy in structure, *i.e.*, horizontal members lengthwise, verticals crosswise; diagonals and long verticals lengthwise with their lower ends to the left.

Avoid notes; make additional drawings when there is danger of ambiguity.

Views. — Show all elevations, sections, and views in their proper position, looking toward the member, the top view above and the bottom view below the elevation. Bottom view is always a horizontal section, seen from above.

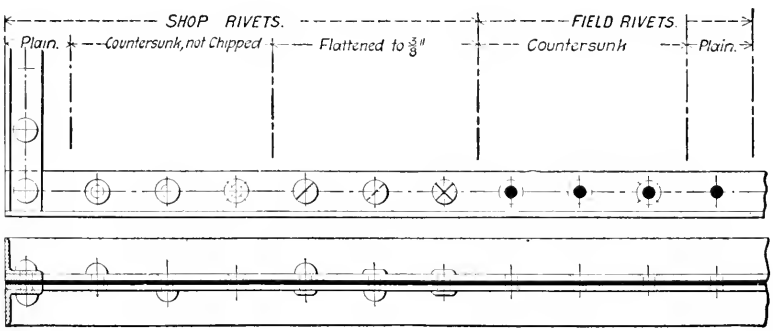

Rivet Signs.

Sectioning. — In sectional views, web and gusset plates are blackened, angles, fillers, etc., cross-hatched, but only when necessary for clearness.

Rivets. — Field connection holes shown in all elevation and sectional views and blackened. Rivet heads shown only where necessary, as near field connections and to indicate flattening, countersinking, etc. Field connection holes must be located independently, and, unless standard, repeated on every sheet where they occur.

CONVENTIONAL SIGNS AS SHOWN IN DIAGRAM.

Connections. — Detail drawings of members should have connecting members shown in red sufficiently to indicate nature of connection and clearance.

Figures. — Main dimensions should be written on every sheet; duplicate dimensions, spacing, etc., should not be repeated, but should refer back to previous complete sheets.

Keys. — Small scale diagrams of the structure shall be made on every detail sheet; the members detailed on it drawn with black lines, and other members with red lines.

Data. — Quality of material, special requirements of workmanship, and size of rivets involved, shall be noted on every sheet.

Marking. — Each piece shipped separately shall be marked with a capital letter and numeral, or numeral only. Small letters shall not be used unless sub-marking is unavoidable. The letters R and L are used only to designate right and left. Large numbers of duplicate small pieces should have special systems of assembling marks, not using capital letters or prime or sub-marks. All letters should be plain; titles, main dimensions and marks should be heavy; dimension and reference lines, red.

Shipping. — Pieces shipped bolted together should be so specified on the drawings, and should have separate marks for identification if accidentally separated.

Rivet Heads. — Standard countersunk rivet heads project $\frac{1}{8}$ in.; where less is required, it must be specified to be chipped. Flattened heads project from $\frac{3}{8}$ to $\frac{7}{16}$ in.; where less is required, they must be countersunk. Rivets and their heads should have standard dimensions, and there they should be shown shop or field driven, flattened, countersunk, or plain, by the standard conventions.

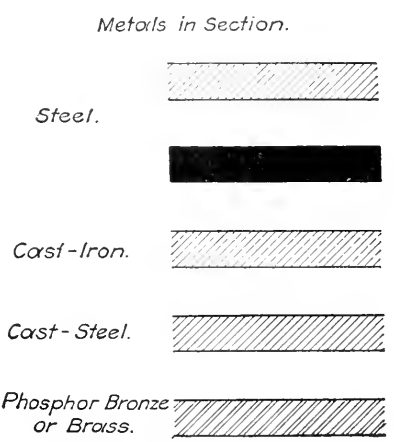

Conventions for Materials.

Conventions.—Principal materials should be indicated by conventional cross sections; steel, solid black or plain hatched; cast iron, hatched with alternate full and dotted lines; cast steel, cross-hatched; phosphor bronze and brass, hatched with alternate double lines and spaces.

Spacing. — In making drawings, the web splices, stiffeners, cover plates, floorbeams, and stringers should be located first, and the rivet spacing kept as regular as possible with small fractions at the ends of the girder.

Stiffeners. — Web stiffeners receiving cross-frames or floorbeams must have fillers and not be crimped. The outstanding flange of the angle should be not less than 4 in. wide, and be

gauged 1¾ in. to the back of the angle so as to allow the floorbeams to be swung into place without spreading the girders.

Sizes. — Use the fewest possible sizes of material, and make the fewest and simplest possible cuts.

Grades. — On grades, bevel the bed plates instead of the base plates.

Anchors. — In spans of less than 50 ft., slot the anchorbolt holes in both ends of the girders.

Omissions. — In square spans, draw only one-half; in skew spans, draw the whole span, but do not repeat rivet-spacing data in duplicate panels.

Sectional Drawings. — When full span is not shown on single sheet, make small scale diagram on each sheet, showing all stiffeners, cross-frames, and floorbeams.

Plan. — For deck spans, show, at the top of the sheet, a top view of the span with complete cross-frames, laterals, and connections. Below this, show inside elevation of far girder with all field holes blackened.

Masonry. — At one end of the elevation, show in red the bridge seat and back wall with dimensions from base of rail to top of masonry, notch of ties, depth of girder, thickness of base plate, bed plate, or shoe. If these dimensions vary at the other end, write both sets here, and specify "for this end" and "for other end."

Bottom Plan. — If the span has bottom lateral bracing, it should be shown by a bottom view drawn below the elevation. If there are no bottom laterals, show only the end of the lower flange with detail of base plate, and show separate details of bed plate.

Sway Frames. — Show details of cross-frame at right hand of sheet in line with elevation. Make the depth of the frame such as to permit it to be swung into place without interfering with the heads of the flange rivets in the girders. A connection plate should be riveted between the diagonal angles at their intersection. In skew spans make an even number of panels in the lateral system.

Horizontal Section. — For through spans, omit the top view, and show floorbeams and stringers in red on the horizontal section with their details on a separate sheet. Arrange the stiffeners so that the floor system can be put in place from the center towards the ends.

Erection. — The first consideration for erection is to make all

details, joints, and connections, so that the structure may be assembled and safe, as quick as possible.

Jaws. — All entering connections, as for floorbeams, stringers, splices, and particularly for end entrances, should be avoided.

Sequence. — In through spans, the floor connections should permit either the floor system to be put in after the erection of the girders, or the girders to be erected after the assembling of the floor system.

Laterals. — Lateral braces and rivets and hitch plates should be kept clear of the bottoms of the ties. Fillers should be shipped riveted in place, and lateral plates should be shipped loose, or bolted to the other members so as not to project beyond them.

Supports. — In viaducts, cross-girders should have shelf brackets where longitudinal girders frame into them. Expansion joints should be arranged so that the field rivets in the fixed end connections to the cross-girders can be driven after the expansion spans are in place.

Where the ends of two spans are supported on the same transverse bent, they should be arranged so that either can be set in place independently of the other.

Anchors. — Anchorbolts should be arranged so that holes can be drilled for them in the masonry after the structure is completely erected. Where there is more than one span, each shoe should have a separate bed plate, particularly when an old structure is to be replaced.

Standards. — Beam and girder connections, framing, rivet clearances, and the gauge of rivet lines, should always conform to the shop standards, which are tabulated with other convenient data of dimensions, strength, and various useful and standard information.

The preceding rules are well supplemented by a more detailed set of instructions prepared by the chief engineer of a large highway-bridge shop, and, although issued six or seven years ago, cover in a very practical way many of the points most frequently arising in the drawing-room, and help to standardize the character of the work so as to make it most economically and efficiently constructed in the shops and erected in the field, and, in connection with the comprehensive tabulations and handbook data accessible to bridge designers, promote uniformity, simplicity, rapidity, and excellence in the designing-room, and are of value in keeping many minor points from being neglected.

Some of the requirements are arbitrary, and are no better than others that might have been made, but they serve to establish regularity, and may be accepted or modified to suit other cases and the developments of later practice.

Preliminary. — On award of contract, see that the original estimate has been checked by the estimating department.

Before beginning the work, obtain all data (contract, estimate, masonry plan, profile, general plan, specifications, etc.) in our possession relating thereto. Examine this data carefully with the view of referring any discrepancy, doubtful or ambiguous point, to the proper authorities at the earliest opportunity, and avoiding any unnecessary delay.

Masonry Plan. — For structures of our own design, a plan showing clearly how masonry is to be built or modified, shall be made and a copy sent to the proper party as soon as possible.

Size of Drawings. — Drawings will generally be made on sheets with a border line 24 × 36 in., leaving a ½-in. margin outside when trimming. Drawings in special cases may be made either 25½ × 46 in. or 27 × 60 in. between border lines. Border lines will consist of a single heavy line.

Views. — Make a diagram showing length and depth of girder, length out to out of end angles and width center to center of girders, also showing all stiffener angles, and where web and flanges splice. If girder is symmetrical about center line, draw only one-half the girder ; if unsymmetrical, full length must be shown. Draw the side elevation near the center of the sheet, leaving room for diagram mentioned above and a plan showing lateral bracing and rivet spacing in cover plates and flange angles. Just below this elevation draw a longitudinal section giving spacing in bottom cover plates, flange angles and shoe plates. In the lower right-hand corner place the title in all cases. In case the girder is so long that the whole or half length, whichever is to be shown, cannot be drawn on one sheet in this manner, then show as much as possible in the manner given above, and the rest on a second sheet so arranged as to paste together.

General Notes. — As far as possible make the arrangement of views uniform for similar classes of work, and put dimensions which are repeated on different members or sheets in the same relative position on each. When a piece is right or left, always make it right on drawing, and state so. In designing, always strive to make pieces symmetrical about the center line, as this

saves drawing out the entire piece; and it also makes only a half templet necessary to lay out the work in the shop.

Marking. — It is not necessary for the draftsman to mark why small pieces are right and left, but it is very important to state why main members are right and left. If members are not interchangeable, they are either right and left, or are entirely different and should have another mark. The right and left may be determined by considering an imaginary line, and placing one member on each side. If the notches or hitches, or whatever prevents the members from being interchangeable, are in precisely the same positions relative to the imaginary line, then they are right and left; if not, they should be marked differently.

Titles for Drawings. — Titles should always be placed in the lower right-hand corner as near the border line as possible, and must contain as full a description of the structure as possible. The information to be given in rote is as follows: Name of members on drawing; number of tracks; deck or through, square or skewed, span; c. c. length; depth and width of span; number of span; name, number, and location of structure; for whom built; date of drawing, and name of draftsman. Place the order number and sheet number in the lower right-hand corner of sheet. When two or more men are working on the same contract, special care must be taken to see that connections and parts which they have in common correspond in all respects. Number all sheets in each contract. As a rule, the scale for detail shop drawings will be 1 in. = 1 ft. Sometimes it may be advantageous to use $\frac{3}{4}$ in., and again to show certain details to a scale of $1\frac{1}{2}$ in. = 1 ft.

Arrangement of Members. — When girder spans of the same depth or of different depths abut on the same bent, they should be arranged so that either span can be set in place first, independent of the other. All lateral bracing, hitch plates, laterals, etc., should be kept enough below the level of the top flanges so that the ties when in place will not foul them, as it is very expensive to cut out ties to clear such obstructions.

Shipping. — Lateral hitch plates should either be shipped loose or riveted to the bracing. If shipped on the girders they are usually broken off in unloading and handling. When slide plates project much beyond the flanges of girders, it is best to ship them loose.

Floorbeams and Stringers. — Give extreme length, out to out

of end angles and flange angles. Make depth $\frac{1}{4}$ in. greater than depth of web plate. Give all rivet pitches and distances between end field-rivet holes.

Riveting.— Enough clear space should be allowed around all field rivets to admit of the button set, which is about 2 in. sq., being held in the line of the axis of the rivet or at right angles to the plate through which the rivet is driven; otherwise, the rivet heads cannot be set down. Take care that the sizes of rivets do not exceed the maximum given in standards for the various sizes of angles, channels, etc., and that no rivets are so placed as to give trouble in driving. Wherever possible keep rivets $1\frac{1}{2}$ in. from ends of plates and angles, and $1\frac{3}{4}$ in. from edges. Allow $\frac{3}{4}$ in. for heads of $\frac{3}{4}$-in. rivets, and $\frac{7}{8}$ in. for heads of $\frac{7}{8}$-in. rivets, unless flattened or countersunk, in which case exact thickness of head will be shown on drawing. Always find out and distinctly mark on drawings whether material is to be iron or steel; whether rivets are to be iron or steel, and whether rivet holes are to be reamed or not. Care must be taken to have the rivets interspace in the two legs of flange angles. Be sure all webs, flanges, and cover plates are plainly marked, and give distances from center to all splices, and from center to end of all cover plates. Make rivet spacing in longitudinal direction vary by $\frac{3}{4}$ in. only, for convenience in punching. Draw out separately details of connection plates and angles where all spacing, etc., cannot be clearly shown on the piece in its true position, in detailing a plate separately. The holes through which field rivets are to be driven will be blackened. The holes for shop rivets will be shown of proper size, but not blackened. In stringer and deck girder cover plates 12 in. wide or less, use only one row of rivets through each angle. In wider plates, use one or two rows, as conditions may require. Rivet holes in crimped angles should be 2 in. or more from the offset.

Shop Bills. — Be sure to make a full description sheet with full shipping directions and full specifications. Put full painting directions on description sheet, stating whether there is field painting or not. Where the specification for painting is incomplete, for instance in regard to tints, call the attention of the superintendent of the drawing department to the fact. When field painting is required, specify on shop bills the number of gallons to ship, allowing for each coat $\frac{1}{2}$ gallon per ton of material. Make a complete bill of each member, giving number of pieces required and shipping marks. When billing I-beams,

channels, and Z-bars, always give depth, width of flange, and thickness of web, in addition to weight and number of shape. Smith work is done entirely from bills. For this reason give sketches in bill of such work.

Allowance for Orders. — Stiffener angles for girders, beams, etc., should be ordered at least $\frac{1}{4}$ in. longer than net length to allow for fitting. For crimped stiffeners, order length is the depth of girder + $\frac{1}{4}$ in. Fillers for girders, order length = (depth of girder) — (width of two angle legs). Bent plates, order length to be taken on outside of bend or bends + $\frac{1}{4}$ to $\frac{1}{2}$ in. For bent angles, the order length is to be taken on longest curve.

In ordering plates that are to be cut to length in the shop, allow $\frac{1}{4}$ in. for each cut; and if plates cut off exceed about 12 in. in length, allow 1 in. for each cut, as such will have to be punched off. Plates $\frac{5}{8}$ in. or over and not rectangular, having beveled ends, corners cut off, etc., are to be made sketch plates, and ordered cut at the mill. Orders for field rivets are to be made, giving exact number needed, diameter, grip, length, head, and connection in which they are to be used. Besides this, make a summary sheet giving the number of each size to be shipped (exact number + 10 per cent), diameter, length, kind of head.

In ordering angles, plates, and bars in multiple lengths, allow $\frac{1}{4}$ in. for each cut. Beams, channels, and Z's should not be ordered in multiple lengths. Plates over $\frac{5}{8}$ in. thick should be ordered exact, not multiple lengths; and if they are not rectangular, make a sketch with dimensions in bill, so they can be sheared in the mill. No re-entrant cut should be given in sketch, as the mill cannot make such a cut, which will have to be punched out in the shop. All plates 12 in. wide and over, and more than 2 ft. long, will be ordered exact. Plates with parallel sides, one end square and one on an angle, when short, order to cut two, allowing $\frac{1}{2}$ in. on total length. If over $\frac{5}{8}$ in. thick, give sketch so plate can be sheared at the mill without any allowance. Plates over 26 in. wide cannot be sheared in the shop.

Web splices of plate girders; order web plates to make a close joint, but do not allow for planing ends unless specifications require a butt joint, when $\frac{1}{4}$ in. will be added for each plate end that is to be planed. Beams and channels which do not require to be faced will be ordered exact length. If they require to be faced, add $\frac{1}{2}$ in. to finished length for mill order.

Flange angles for girders and columns which require to be faced will be ordered $\frac{1}{2}$ in. longer than finished length. Never use sixteenths of an inch in giving the mill-order lengths of material; eighths is the least fractional part of an inch permissible.

STANDARDS.

Many railroads adopt standard sizes for all bridge drawings, and have carefully prepared forms for all computations, data and records of bridges, thus keeping exact information readily available of all structures, and facilitating hasty operations in case of renewals for wrecks, etc. In a set of standards established several years ago for the Northern Pacific Railroad, the drawings were all made on sheets of uniform size, and were then photographed to uniform scale on $9 \times 7\frac{1}{2}$-in. negatives, several of them being used if necessary to make long spans with several sections which were printed on single pages of not more than about 40 in. extreme length. These sheets were bound in albums giving all important data, and easily showing details by the aid of a magnifying glass. They were found very convenient for reference by engineers, inspectors, erectors, and contractors, and were easily, quickly, and cheaply made.

FILING AND INDEXING TRACINGS.

There is often difficulty in providing satisfactory storage for the tracings, and in securing uniformity and completeness in routine data. These points have been especially well covered in the system now adopted in the office of the bridge engineer of the Erie Railroad Company, New York.

There are owned and operated by the Erie Railroad Company about 2500 miles of track, some of which has two, three, and even four-track structures. It is divided into sixteen principal divisions, besides which there are many branches and spurs; and the bridges which are built or maintained by the railroad company now number 4000, including 700 masonry arch bridges and all openings which cannot be spanned by the rails, say, above 16 in. in the clear.

All drawings for the bridge structures are made on sheets of tracing cloth with a standard width of $22\frac{1}{2}$ in. of any necessary length, folded to 36 in. The ends are punched, and they are arranged in sets, sometimes secured with brass paper fasteners. For girder bridges and other short spans, the drawings are often

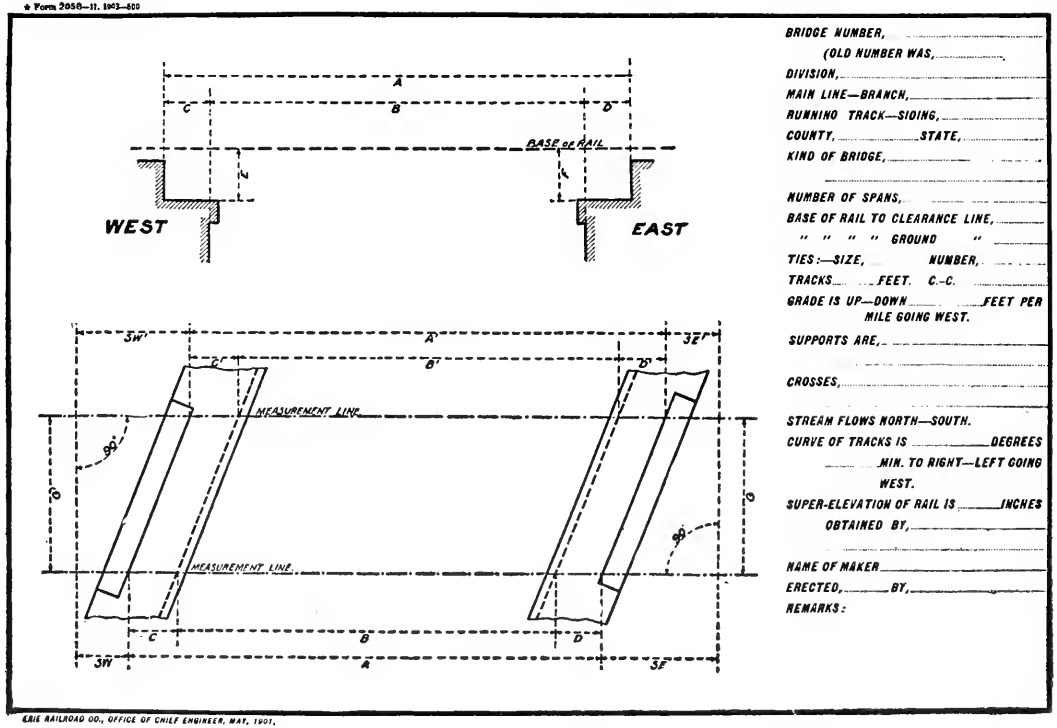

Standard Blank for Reports and Principal Data of Bridges.

made within 8 × 12½-in. limits, the size of a sheet of legal cap paper, and are arranged symmetrically across a standard sheet of tracing cloth 22½ in. wide. Generally, the data for the wooden floor is put at the top of the sheet, the strain sheet next, and the masonry sheet at the foot of the sheet, thus enabling all three to be blue-printed at once and filed away on a single standard-size sheet, an arrangement which obviates the difficulty before experienced of losing or displacing the small sheets. The small sheets can be cut apart and put with specifications or correspondence on pages of the same size, or they can be trimmed down to neat dimensions, except at the left hand of the upper sheet, where a wide margin is left. The pages are folded on horizontal lines separating them, but are not cut apart. The upper left-hand margin is punched with standard spacing and bound between adjustable covers to make part of any book or collection required for reference or field work.

Each full-size set of prints is bound in a cover of heavy manila paper marked with the number and title of the bridge. These sets, containing from 1 to 100 sheets, are stored in special cabinets which were designed in the office of the bridge engineer and were made to order. The cabinets are built in sections a fraction more than 3 ft. wide and 4 ft. long. The top is perfectly flat, is made of thick, stiff boards, and has a height of 40 in. above the floor, so as to serve conveniently as a table for the examination of drawings or for other purposes. The sections are made with the ends flush, so that they fit closely together and make a continuous drawing-table of any required length. The sides and ends of the sections are paneled, and the front is closed by a pair of doors which open so as to disclose the whole area of the interior and clear the full-width drawers, which are shallow trays with the vertical side pieces omitted on the front edges. They have horizontal cover strips on the upper edges at the rear end to confine the ends of the sheets and prevent them from engaging the upper drawers when they are pulled out. Each drawer will store about 200 sheets of tracings, which are thus always kept perfectly flat and smooth, and can be easily selected from inspection of the marks and titles on the covers of the different sets. Each section of the cabinet contains ten trays, and therefore has a capacity of about 2000 drawings. At present there are eight sections of the cabinet in use in the office of the bridge engineer. A special feature of the design of these trays is that they are supported

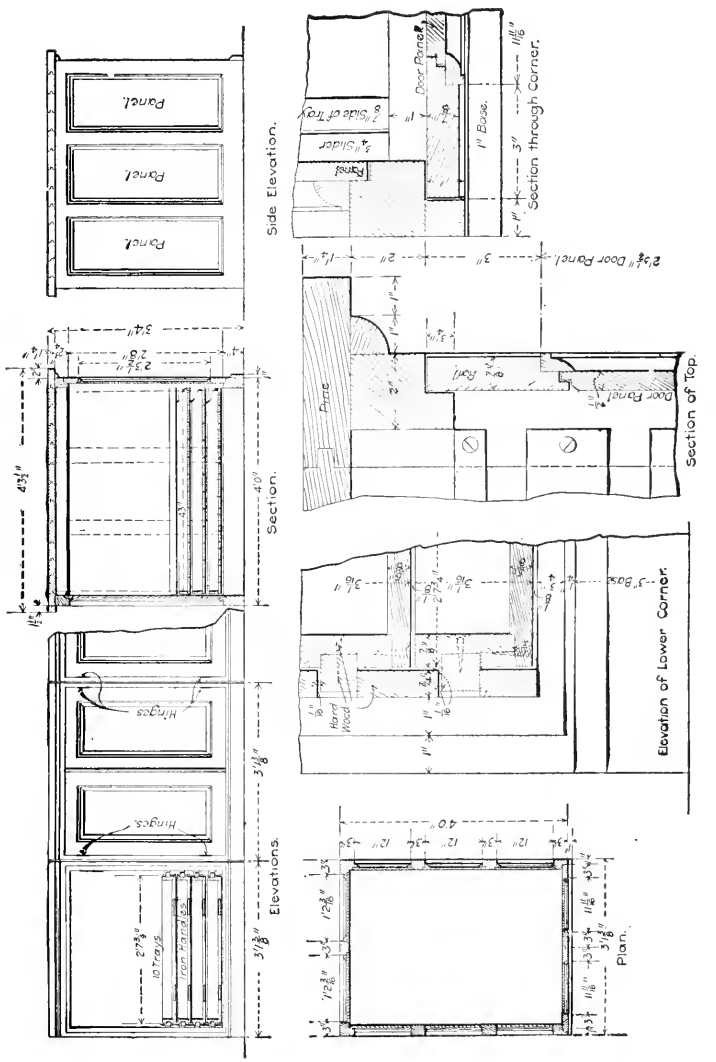
Side Elevation.
Section.
Elevations.
Section through Corner.
Section of Top.
Elevation of Lower Corner.
Plan.
Panel.
Hinges.
Iron Handles.
10 Trays.
Door Panel.
1" Base.
Pine
Roll
Hard Wood
3" Base

by ribs projecting from the centers of the sides and engaging the slots between bearing strips fastened to the walls of the cabinet. These ribs and strips are made of hardwood, polished and lubricated with a little soap or plumbago, so that the drawers slide very easily.

The cabinets are fitted with bronze hardware, and are very neatly finished. The exteriors, except the tops, are made of ash, filled and varnished; the interiors and tops are of white pine, and the trays are shellacked. The cabinets were delivered in separate pieces, and were put together in the offices with screws. The lengths of the tops were made $\frac{1}{8}$ in. full, and were planed in position, so that the adjacent sections fitted together perfectly with smooth joints in the table portion. The sections are nominally entirely separate, but they are actually secured by two or three screws connecting the adjacent sides of successive sections.

The drawings in the cabinets are indexed simply by the number of the bridge to which they refer, each set of the drawings thus having one number, and all drawings belonging to that bridge having the same number, and being bound together in the same cover or sets of covers for that structure. These numbers are recorded in a general index book, which is ruled in four columns. Each page is dated and headed with the division number and branch. The first column contains the new numbers of the bridges, which are simply the record of the position on the railroad, expressed by the number of the nearest mile post and the hundredths of a mile to it, together with the prefix of the letter H when the bridge carries a highway, and prefixed by letter F, indicating foreign, when the bridge is not maintained by the Erie Railroad Company. For example, in one sheet of the Delaware Division the first bridge is numbered H 87.80, and the last one is numbered 157.02. The second column of the table contains the former bridge number, with the name of the nearest station. The third column is headed "Kind of bridge," and the entries in it are like the following: "Pratt through. 12-in. I-Beam deck. Plate-girder deck. Wood, Erie standard. Post through," etc. The fourth column tells the purpose of the structure and is headed "Crosses." In it the entries are like the following: "Erie Railroad, Main Line. Water-course. Tannery Creek. Delaware River. Highway. Callicoon Creek and Highway," etc.

The general bridge list from which this index is prepared is made on blanks like the accompanying sample, which are filled

out by the division engineers, who preserve a blue-print copy and return the original to the main office. It is there filed for reference and serves as a skeleton record from which reliable general information can always be secured instantly. The original sheets are corrected in red ink from time to time as changes are made and reported, and new blanks are issued and filed to show the latest state of affairs.

Three different blanks are issued, one for square crossings, one for right-handed skews, and one for left-handed skews, all of them substantially like the one here illustrated, which is considered a right-handed skew. With these blanks is issued a page of instructions which directs that the data should be written in on the blank with black drawing-ink, and that all of it for the same division should be done, for the sake of uniformity, by one person. The right-hand end of the sheet is always considered east, and when, on branch lines, it is doubtful which is east, the names of the termini are written on it. Where piers exist between the abutments, they are drawn in on the sketch and measurements added.

Where back walls do not exist, the fact is noted and the distance A is recorded as the length over stringers. Where skew bridges have the stringer back walls squared, the distance A is given as for the regular skew line, and an explanatory note is added. Where bridges of different kinds exist side by side at the same opening, they are recorded on separate sheets, which are numbered, and on them it is noted whether the structure is for the east-bound, west-bound, or side tracks, and the number of the sheets in the set is recorded on each sheet. These records are thus made to show the general condition and changes of the work, but are never used for ordering changes, repairs, or new work, for which purposes special surveys are made.

This system of arrangement, recording, and indexing has been found very convenient and satisfactory, and is in line with the spirit of standardizing and systemization which prevails in the office, and by means of which a great deal of routine work is done once for all, so as to be available for future requirements of the same kind, and saves a great amount of duplicate work. Many of the details which occur frequently in the structures themselves have been standardized, and tables have been prepared by which calculation and design can be largely facilitated by inspection.

This work has been planned and directed by Mr. Mason R. Strong, engineer of bridges.

CHAPTER VII

CONSTRUCTION AND ERECTION

Bills of materials are made from the strain sheets, short pieces being ordered in multiple lengths, and an allowance of a fraction of an inch made for each cut. If the bridge shop is not connected with the rolling-mill, the materials are sometimes classified and plates and shape ordered from different places, those of ordinary lengths and common or small sizes being often taken from stock. An assistant at the mills inspects the materials for surface defects and dimensions, and makes tests of the finished materials and of the steel ingots. When received at the bridge shops, it is reinspected and checked and sorted in piles. All pieces are straightened when necessary, by rolls, presses, or sometimes, in the case of wide plates, by peaning. One end of each piece is sheared square, and it is laid out by a center punch fitting holes bored in wooden templates.

They are sheared to length, and the short pieces sent to small punches, and the long ones to other machines which usually have multiple punches set to punch all the parallel rows of holes in the same flange piece with one spacing. In many cases these punches have spacing tables which can be set to punch any regular pitch without having the piece laid out except at the ends, where the first hole must be marked and any with irregular spacing. If holes are to be punched in both flanges of a long angle or on both sides of a long plate, two machines are often arranged so that one set of holes will be punched as the piece moves forward in one direction, and when it returns in the opposite direction a few feet away transversely, another machine will punch the other set of holes, thus obviating the necessity of turning the piece end for end, which is always troublesome. When the ends of vertical web-stiffener angles or fillers are required to be fitted to close bearing against the flange angles, they are usually planed in a special machine, clamped together in piles on the bed of a special milling machine, and finished exactly or sometimes similarly ground on an emery wheel.

Surfaces which will come in contact are painted usually with red lead, and the girders are assembled with service bolts. Usually this is done with the web in a horizontal plane on steel skids; but sometimes a special cast iron floor is provided which has T-shape slots like those of a planer bed, to which the bottom flange angles may be bolted firmly with any required camber, and the web plates assembled to them in vertical planes, the materials being handled in either case by overhead trolleys, hoists, or travelers of some kind. When the flanges are heavily reinforced they are sometimes assembled together separate from the webs and carefully reamed or perhaps partly riveted before being connected to the web. After all the principal pieces are assembled, all holes may be reamed either by a battery of radial drills or by pneumatic tools.

The majority of the rivets are usually driven by stationary hydraulic or pneumatic machines through which the girder is passed, suspended by its center of gravity from an overhead trolley. In some shops the large girders are mounted on cars on a surface track and pass between the jaws of riveting machines which have very wide openings and rise and fall vertically so as to drive all web rivets in the same vertical line without moving the girder. In other cases the riveting machines and reamers are mounted on traveling gantries which move back and forth longitudinally over long girders, and sometimes rivets are driven by pneumatic yoke machines moving on overhead trolley tracks from end to end of the girder and adjustable to any height by differential hoists, or they may be driven by small pneumatic hammers.

The finished girders are carefully inspected for workmanship and riveting, painted, marked, and stored on skids until ready for shipment. In large shops they are generally handled entirely by traveling girder cranes in the shops and storage yards, but in smaller shops the heavier girders are sometimes assembled outside and handled only by blocking and jacking, which affords a slow and sure method for the greatest weights. Usually, however, there are derricks or cranes in the yards and overhead trolleys in the shops which suffice. Sometimes several of the latter are operated simultaneously, and in extreme cases the ends may be lifted successively.

They should always be shipped with their webs in vertical planes, and secured so as to be stable and yet have sufficient freedom to accommodate themselves to curves in the tracks

without lateral displacement on the cars. Long girders are loaded on two or more flat cars with bearings at the ends only, so that all but the end cars are idlers or spacers. For very heavy girders it is necessary to distribute the loads over the trucks of ordinary cars, and the girders are usually seated with their lower flanges on transverse wooden sills which have inclined braces from both ends to the top flange of the girder to keep the latter from danger of overturning. Both sills are usually supported on segmental tracks at the ends, and are secured to the car floor with vertical pins through their centers; one pin is fixed in the sill, and the other has a slotted hole, thus allowing swiveling and longitudinal displacement on curves. Occasionally deck spans are riveted up complete with sway braces and laterals at the shop.

Girders are unloaded at or near the site by jacking, cribbing, and skidding, by gin poles, derricks, gantries, gallows frames, or derrick cars, usually one of the two latter. They are sometimes unloaded and stored near the bridge, and afterwards reloaded, brought to position, and set in place, but whenever possible they are delivered between their piers or towers or columns on the old structure or on falsework, and are set in approximately the required position when removed from the cars, except in the erection of new viaducts or elevated railroad structures, when they are usually handled by the booms or overhang of an overhead traveler moving on the finished structure and assembling all parts of it one panel in advance. Girders of moderate length and weight can be handled by a single derrick car which unloads them from the cars on which they are shipped, carries them to their position in the bridge, and lowers them to their permanent seats. Long and heavy girders require two derrick cars, one at each end. Sometimes these cars have locomotive gearing, and can bring in the girders from remote sidings advantageously. Gallows frames are almost universally available, and consist of tranverse overhead bents of timber with clearance for trains through them. They are set up, one at each end of the span, guyed longitudinally, and provided with a tackle at each end of each cap, four in all. The girder is brought through and under the gallows frames and lifted off the car by both tackles at each end; the car is removed, the girder is revolved ninety degrees if necessary, and fleeted from one side or the other by operating one tackle and slacking the other, and then lowered vertically to the final position on its bearings, or set in tempo-

rary position and afterwards moved transversely to their seats by skidding or otherwise. Floor system, laterals, sway bracing, etc., can be assembled and service-bolted and the traffic carried before the field rivets are driven. Plate girder spans which replace old structures can usually be erected without interrupting railroad or highway traffic.

Shipping a 71-Ton Girder. — The center girder of a through bridge carrying four tracks of the New York Central & Hudson River Railroad, at Oriskany, N. Y., is 87 ft. long, 11 ft. high, and 2 ft. wide, and weighs 142,000 lbs. It was loaded on two Pennsylvania Railroad steel gun trucks of 100,000 lbs. capacity each, separated by an idle spacer car. Each end of the girder was seated on a pair of horizontal transverse sills, bolted to-

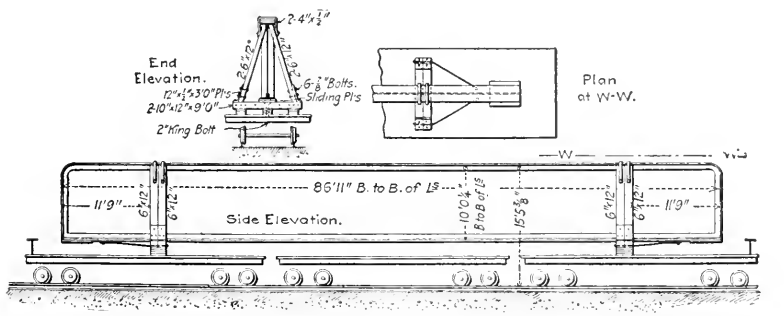

Shipping a 71-ton Girder.

gether and extending across the car floor to which they were secured in the center by a vertical 2-in. kingbolt. The bolt head was countersunk into the top of the sill and allowed the girder to swivel in passing around curves. The ends of the sills were shod with iron plates, and rested there and in the middle on longitudinal steel track plates bolted to the car floor. The ends of the sills were braced to the under sides of the top flange angles by pairs of inclined timbers connected to them by bent plates at the bottom, and connected together at the top by yoke plates over the top flange of the girder. Each sill was braced at right angles to the girder by a pair of horizontal rods passing through its ends with nut and washer bearings and loop eyes engaging temporary bolts through rivet holes in the bottom flange of the girder near the ends.

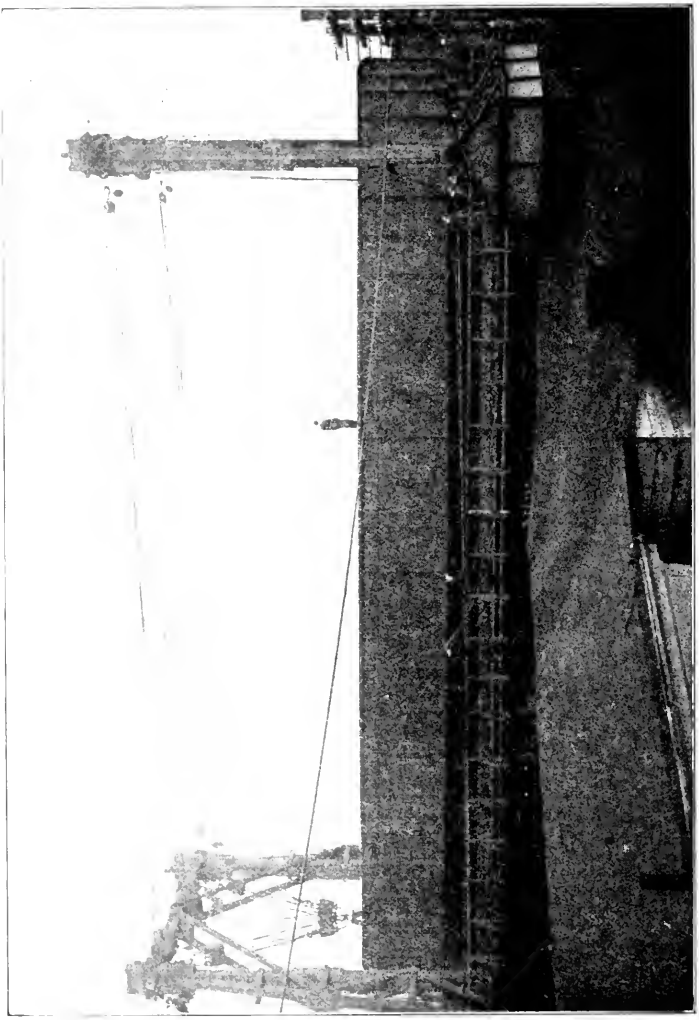

Girders Lifted to Permit Removal of Cars.

SHIPPING A PAIR OF LONG-PLATE GIRDERS.

A pair of 105-ft. plate girders, 9 ft. high and weighing 62,000 lbs. each, were shipped by the Phœnix Bridge Company complete from their shops to Jefferson, Ala., for the Southern Railway Company. They were set as close together as possible on a pair of transverse sills, about 74 ft. apart, on the decks of two steel flat cars of 100,000 lbs. capacity each, with a third similar idle car between for a spacer. The sills were placed nearly in the centers of the end cars, and were pivoted to them by vertical 3-in. pins in the centers, one of them having a round hole in the car deck and the other having its hole slotted about 6 in. to allow for longitudinal displacement. The ends of the 12 × 14-in. sills were shod with steel plates and slipped on segmental track plates to allow angular displacement on curves.

On the ends of the sills were seated 8 × 8-in. inclined posts, with their upper ends fitted to bear against the webs and under sides of the top flange angles, connected by horizontal bolts through the tops of bent channel-bars bolted to the upper ends of the braces. The lower ends of the braces were beveled to fit the upper sides of the sills and bear against the vertical flanges of short heel angles bolted across the sills. The sides of the braces were fillered out with wooden blocks to receive steel jaw plates bolted to them and to the sides of the sills. Each end of each sill had a pair of 1⅛-in. horizontal diagonal rods passing through it in opposite directions with their nuts bearing on beveled washers. The opposite extremities of the rods had loop eyes with connection bolts engaging open rivet holes in the bottom flange of the girder.

Very long and heavy girders are most often erected by the use of gallows frames with double sets of tackles, as was done in the case of the three-span plate girder bridge which carries the tracks of the Central Railroad of New Jersey across the Pennsylvania Railroad at Newark, N. J. The girders are from about 50 to 109 ft. long, and were riveted up complete in the shops with a maximum depth and weight of 11 ft. and 154,760 lbs. respectively. The longest girders were each loaded on two 100,000-lb. cars with a third similar car between them for a spacer, and were delivered on falsework, in position at the site. A pair of heavy gallows frames with horizontal and vertical clearances of about 25 and 40 ft., which each contained about 6500 ft. b. m of timber and weighed about 6,000 lbs., had been previously

erected across the track near each end of the girder. The tops of the gallows frames were connected by two horizontal 4-part tackles, and were guyed by tackles in both directions. From each end of each cap was suspended a 9-part tackle with all their fall lines led to one hoisting engine on shore.

The girders were delivered separately, lifted a few inches by the tackles, the cars released and withdrawn, the girder fleeted to one side of the track, lowered to bearing on transverse horizontal rails, skidded to position, and jacked down to their permanent seats. Floorbeams were delivered on small cars, and swung to position by hand tackles suspended from transverse timbers laid across the top flanges of the girders. They were braced, service-bolted, and the tracks laid and traffic admitted before the field-riveting was completed.

CHAPTER VIII

TESTS OF FULL-SIZE GIRDERS

A FULL-SIZE plate girder, a duplicate of floorbeams in an existing double-track railroad bridge, was tested to destruction by a bending load arranged to correspond to the static service load and applied by hydraulic jacks at the rail points. The end connections were the same as in the bridge, and the girder was riveted into a reaction frame in a horizontal plane with a rigid transverse beam parallel to the floorbeam to receive the thrust of the four 10-in. hydraulic rams applied as shown in the illustration at stringer points. The girder was built entirely of wrought iron, and was tested by the engineer who designed the bridge, and at the bridge shop where the bridge was built. A paper on the test was presented by Mr. A. P. Boller to the American Society of Civil Engineers, November 16, 1887. At each end of the girder there were twenty-six $\frac{7}{8}$-in. rivets connecting it to the vertical post. In the bridge the maximum static working loads were calculated to be 40,000 lbs. at each stringer bearing which produced the following computed stresses per sq. in. Flanges at *m*,* 3800; at *a*, 5700; at *b*, 6400. Shear in web between *a* and *b*, 2600; between *a* and end, 8000 lbs. End connection rivets, single shear, 5000, bearing stress 6600. Flange rivets from end to second girder stringer, 3400 double shear and 11,600 bearing stress, from end to first stringer, 4200 double shear and 15,000 bearing. For 2 ft. from end, 5800 lbs. double shear and 20,000 bearing.

In the test, the loads were equal on the rams, and the deflections were measured to a fine wire parallel to the lower flange and were found equal at *a* and *b*. The total loads, deflections and permanent sets were respectively 177,500 lbs., $\frac{1}{8}$ in., 0.0; 355,000, $\frac{5}{16}$, 0.0; 443,600, $\frac{3}{8}$, 0.0; 532,500, —, $\frac{1}{32}$; 622,000, —, $\frac{5}{32}$. 653,500, failure commenced. The first crack was in the root of the lower flange angles at the first bend from the end, and the continued pressure tore the two flanges apart, tore through

* *m*, *a*, and *b* are points, respectively, 2 ft., 4 ft. 7 in., and 9 ft. 7 in. from the end of the floorbeam.

the vertical flange and thence across the web to the top flange, as shown. The web failed at one end only, where there was a sharp deflection under the end ram, *a*. At the opposite end the lower flange angles failed in the root, but the web did not fail, and the deflection was an easy curve. As the failure of the lower flanges progressed, the post connection angles also failed by tearing through the root, and the rivet heads were broken from their upper rivets. The web rivets and the flange plates in the broken flanges remained intact.

When the first permanent set, $\frac{1}{32}$ in., occurred, the load of

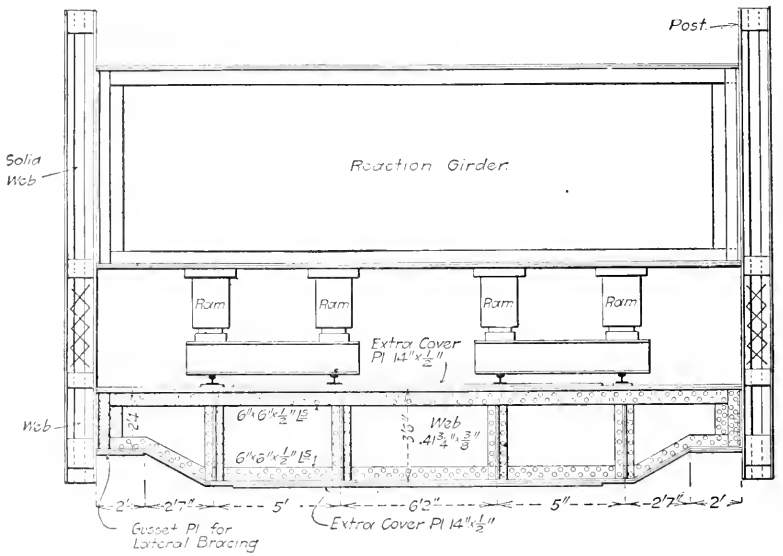

Test to Destruction of Full-size Plate Girder Floorbeam.

532,500 lbs., was about $3\frac{1}{3}$ times that for which the floorbeam was proportioned, and the resulting stresses were computed to be: In the flanges 12,600, 19,000, and 21,200 at points *m*, *a*, and *b* respectively. In the web, 8700 and 26,600 lbs. between *a* and *b* and at minimum section respectively; and for rivets, 22,000 lbs. bearing and 16,600 lbs. single shear for the post attachment, and 66,600 and 19,300 lbs. bearing and double shear for the end rivets in the web and flange connections.

When the failure in the angles was first noted, the recorded load was 653,500 lbs., or more than four times that which the floorbeam was proportioned for, and the calculated stresses were about $\frac{1}{5}$ more than those above given, amounting to 15,000 lbs.

tension in the flange, and 80,000 lbs. bearing stress on the flange rivets. Evidently these stresses did not exist, or they would not have exceeded the elastic limit of the angles, but would have torn the web from them.

As soon as failure commenced in the roots of the angles, the stress was concentrated in the vertical flanges of the angles, and they were quickly ruptured. As the angles were rolled from piled billets, this was naturally the weakest point, and they would have been stronger and the strength of the beam considerably increased if they had been rolled from solid ingots or flat bars.

The conclusions drawn by the experimenter were that the floorbeam was safe; that it was much stiffer than had been generally supposed; that enormous friction is developed by power riveting; and that the customary method of proportioning rivets, viz., that the horizontal component between any two points divided by the allowable bearing pressure per sq. in. equals the number of rivets required, is not true.

The design of the beam was criticised because the ends of the beam were stressed twice as much as they should be, and the center only half as much as its proportions allowed, and because a better design could be made at the same cost.

On July 3, 1897, a masonry arch bridge of five 29½-ft. spans across the Adour River, at Tarbes, France, on the Toulouse & Bayonne Railroad, was partly destroyed by a flood, and about 138 ft. of the structure was washed away. The French army engineer corps has provided adjustable emergency bridge spans of different lengths, which are kept in stock in order to quickly re-establish train service when bridges are destroyed in war time. One of these spans, of 147½ ft., was requested for temporary service, and official arrangements at Versailles having been completed by July 9, it was shipped to the site, assembled and erected by protrusion, so that it was ready for traffic July 16. On July 17, while being subjected to the second of a series of static load tests, it suddenly collapsed and fell to the bottom of the river, one of the girders breaking in two, and both being badly twisted.

The bridge was of the Marcille type, with two plate girders 7.2 ft. deep and 147½ ft. long, each made in five sections, one of about 33 ft. in the middle, two of 24½ ft. on each side, and one of 8¼ ft. at each end. The ⅜-in. web was made in two longitudinal strips spliced in the center of its height with two horizontal longitudinal cover plates. Each flange had a 24 × 1½-in.

section made up of two $5 \times 5 \times \frac{9}{16}$ in. angles and several cover plates. At every $8\frac{1}{4}$ ft. the web was stiffened on each side by a vertical angle riveted to it with the ends curved 90 degrees, and connected to the top and bottom flange cover plates outside the flange angles, by two $\frac{9}{16}$-in. rivets each. To these angles were riveted transverse vertical diaphragm plates about 11 in. wide, with a light vertical flange angle on the outer edge. The space between these main stiffeners was divided into three equal panels by single T-bars riveted to the web and having bent ends riveted to the flanges. The sections of the girder were field-spliced by turned horizontal longitudinal bolts through the reinforced end vertical web stiffeners, and by horizontal cover plates on both sides of each flange.

The girders were spaced 5 ft. apart on centers, and were connected only by horizontal transverse struts 8 ft. apart, with no sway braces or lateral diagonals whatever. The upper struts had 20-in. webs, and were connected to the girder webs and top flanges respectively with ten and four bolts at each end. The lower line of struts were in the vertical planes of the upper ones, and were each composed of a pair of angles bolted to the bottom flanges of the girders. The total weight of the span was 208,000 lbs., of which 14,000 lbs. was track weight. The rails were laid directly over the centers of the girders, which had bearings 145.3 ft. apart on centers. Just before the test, the girders showed a center vertical deflection of 2.322 in. under dead load alone, and a lateral deflection of 1.693 in. in the total length. On the previous afternoon the lateral deflection had been 2.283 in.

The tests were made with two locomotives and their tenders and a loaded car. Each locomotive weighed 59,525 lbs. on four axles, each tender weighed 20,062 lbs. on two axles, and the car weighed 33,000 lbs. on two axles. Four Manet instruments were attached to the girders to measure the vertical deflections under the test loads, and two observers were stationed between the girders in the middle of the span to record their indications.

In the first test the train advanced very slowly until the first axle of the first locomotive was in the center of the span, and after remaining stationary there for 30 minutes, backed off, leaving the span just 38 minutes after having entered it. This train load caused an additional deflection of 2.28 in. in the axis of the bridge, an amount which was constant during the time of the test and which did not entirely disappear after the locomotives

were withdrawn, but caused a permanent set of 2.79 in. or an increase of 0.47 in. more than the dead load deflection at the commencement of the test. The track was observed to be 0.98 in. lower over the upstream girder than over the downstream girder in the middle of the span, thus indicating unequal deflections in the girders. These results were considered normal, and the irregularity of deflections was attributed to variations in bolting up the sections of the girders.

The second static test, which was to cover the whole length of the span with the train load, was then immediately commenced. One minute after passing the first abutment, and when the forward axle of the front locomotive was within about 25 ft. of the opposite abutment, the upper parts of the girders buckled upstream and they turned over, falling to the bottom of the river and carrying the train with them. The girders tipped over and twisted so as to fall on their sides in the center. They fell upstream, the upstream girder falling on the bottom and the other one nearly on top of it. The forward locomotive fell clear of the span upstream, and the other locomotive fell partly on the span, near the center. The girders were broken and bent so as to make a sharp angle, pointing upstream, near the middle of the span. At this point the webs of the girders were in a nearly horizontal plane; at the ends they remained near the tops of the abutments in planes inclined about 45 degrees to the vertical, thus making warped surfaces. At the moment of failure the deflection instruments were working regularly and had not indicated any abnormal action in the girders. The observers heard two snapping noises like the sound of pebbles thrown against glass, followed immediately by a succession of similar rapid snaps, and the span collapsed, leaving the abutments and timber seats uninjured.

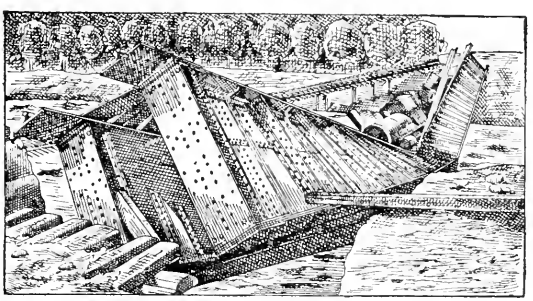

Tarbes Bridge Test.

The upstream girder was broken entirely across in a direction

nearly perpendicular to its length, at a point about 8 ft. from the center on the loaded side. The adjacent section of the loaded side of the girder was torn and buckled, and the vertical web stiffener at the point of fracture was torn apart from end to end, partly through one flange, and partly through the other. The downstream girder fell on top of the other and was not so badly injured, though the center section was torn and buckled, but was not entirely broken across. The cross-struts between the girders were bent and their connections injured.

In the upstream girder the three cover plates of the top flange were broken through in the line of five rivets, and the fracture extended through the chord angles and web, following the lines of rivets first on one and then the other side of the vertical web stiffener. In the lower flange the fracture extended about 2 ft. longitudinally and included twelve headless rivets. The downstream girder had the top flange broken half way across, and the other side of it was buckled at the connection of the horizontal strut from the point of rupture of the other girder. The web was bent but not broken, and the lower flange was injured but not broken through.

The conclusion of the engineers present was that the top flange of the upstream girder began to buckle at the point of maximum flexure about 65 ft. from the loaded end, and first snapped the heads off the two rivets through it and the vertical web stiffener there, and the increasing lateral deflection broke the rivets in the web stiffener and transverse struts and warped the girder till it buckled out and collapsed, bringing the downstream girder with it.

It is said that lateral and sway bracing in these military emergency bridges was omitted to simplify erection and reduce weight, and that it was intended to stiffen them with wooden bracing or by some other convenient expedient.

An account of the accident, together with a description of the bridge, calculations of its strength, and views of the girders, is published in the June "Bulletin" of the Society of Civil Engineers of France.

PART II

EXAMPLES OF RAILROAD PLATE GIRDER SPANS

SHORT-SPAN railroad girders are of such simple construction that few of them attract attention or are illustrated that are less than 50 ft. length. They usually conform to the elementary features of construction mentioned in the previous chapter for general girder work, except that for through spans the girders are so shallow that there is no opportunity for kneebraces or sway-brace gusset plates, and deck girders are likely to have lateral diagonals, in only one plane. Flange pieces are not spliced, and web plates have only one or two splices, if any. End bearings are almost always on flat plates, and expansion is often neglected. They are often shipped on single flat cars with one end elevated if necessary to overhang the adjacent flat car, and sometimes both girders of a deck span are riveted together complete with sway and lateral bracing at the shops. They are easily handled in erection and unloading by ordinary derricks, gin poles, and derrick or wrecking cars. The necessary materials are almost always procurable in the open market and from ordinary stock lists, and they can be well built at any bridge or structural shop provided with the simplest good tools. They require a minimum of field-riveting and fitting at the site, and practical considerations of construction will generally insure rigid structures.

In spans above 50 ft. long many unimportant features of short girders become vital and demand special study and careful treatment. There are many more splices in the principal materials, and they are more difficult to make so as to develop the maximum strength and efficiency. It is difficult sometimes to procure materials of the required dimensions, and there may be danger of injuring them in shop operations. Flange sections are likely to become unwieldy, and rivets may be so long that it is difficult to drive them satisfactorily, even with powerful machinery, and still more difficult to cut out and replace poor ones without injury to the girder. Provision should be made for camber, and floorbeam field-riveted connections should be

reamed to thick cast iron templates. The deflections and temperature movements of the girders become much greater, and special carefully finished bearings are required. Reactions become large, and special provisions are necessary to distribute the pressures uniformly on the masonry. The difficulties of loading and unloading, transportation and erection, increase rapidly, and special and costly plant is required to erect them quickly and economically. In a very few cases plate girders have been assembled at the site, but this is rarely or never justifiable nowadays; and as one of the most important advantages of plate girder construction is their completion at the shops, their extreme dimensions are governed by the shipment restrictions if not limited by considerations of economical weight and efficiency. The greatest depth that will clear the bridges and tunnels on the principal railroad lines is about 11 ft., and the difficulties of passing curves and loading on cars increase rapidly for lengths of more than 100 ft., so that about 130 ft. is the extreme length so far constructed in this country or likely to be at present.

The descriptions here given are mostly for long-span girders, because these have so many more special features and more elaborate details. Each description is complete, but in most cases the details of the end bearings are summarized, and reference is given to other chapters where classified illustrations are presented. The girders described represent general railroad practice and some special structures, but do not in general exemplify standards formally adopted except in the case of some details. A large proportion of them have been built since 1900, and are designed for heavy loads.

CHAPTER IX

SPANS OF TWENTY-FIVE TO EIGHTY FT. INCLUSIVE

Marent Gulch, 30-ft. Deck.

THE Marent Gulch Viaduct on the main line of the Northern Pacific Railroad in Montana is a single-track wrought iron structure built in 1884 to replace a wooden viaduct on the same site. At each end there are two 30-ft. deck plate girder spans that vary in several respects from present standards for such work, and thus give an index of the development in such structures since the beginning of their construction from steel. The girders are made without web stiffeners except at the ends; the adjacent ends of the two spans are web-spliced together to virtually make a continuous girder over the trestle bent; tension rods are used for the top and bottom lateral diagonals, their connections are made with nuts bearing on bent plates, and at the abutments the girders are seated on cast pedestals with vertical webs bearing on the masonry without any horizontal bottom base plate as shown on page 129. The second spans have their bottom flanges inclined upwards at the river ends so as to reduce the depth there to correspond with that of the regular stringers of the adjacent truss span to which they are web-spliced with bolts through slotted holes in double cover plates.

Oak Lane, 35 Ft.

A wooden trestle bridge carrying three tracks of the Philadelphia & Reading Railway over Oak Lane, Philadelphia, has recently been replaced by a two-span, deck plate girder structure, with a solid trough floor. The bridge is on a slight grade and crosses a 30-ft. roadway and a 10-ft. sidewalk, and in order to secure the greatest economy and least depth of girders, it was made with two spans, supported at the adjacent ends on a row of columns seated on the curb between the roadway and the sidewalk. The columns were made with pairs of channels latticed, and being only about 9 ft. high were not braced, except by brackets at the top connecting them to the end transverse struts

between the girders. The bridge has nine girders, arranged to come under the center of each of four tracks, one between each pair of tracks and one outside of each outside track. On one side of the bridge an 11-ft. sidewalk is carried on cantilever brackets, and on the other side provision is made for the same ultimate arrangement, but at present one of the four tracks is omitted there, and its position is temporarily occupied by the second sidewalk, which will be cantilevered out when the last track is laid.

The girders over the roadway are made shallow on account of the limited headway, and are peculiar in that their top and bottom flanges are different. The outside girders have T-shape top and bottom flanges, but the top flanges are reinforced in the middle by 11-in. plates covering vertical legs of the angles, and projecting beyond their edges on filler plates. The intermediate girders have T-shape bottom flanges and H-shape top flanges made with two pairs of angles, both nearly full length, and cover plates reinforcing their vertical legs, except for a short distance at each end. Vertical web-stiffener angles are fitted between the upper and lower angles of the top flange. At both ends the girders have double pairs of end web-stiffener angles to provide for the shear, and at the abutment end gusset plates are riveted to them to stiffen the 24 × 24-in. sole plates, which have expansion bearings on masonry plates beveled to grade, as are the column cap plates. The long-span girders take bearing on nearly the whole surface of the column caps, and their end vertical web-stiffener angles are field-riveted to those of the short-span girders about 12 ft. long to support the latter, thus making the two spans continuous over the columns.

The girders are connected by four lines of transverse cross-frames, and by the trough floor of transverse 6 × $3\frac{1}{2}$ × $\frac{3}{8}$-in. Z-bars, with 9 × $\frac{3}{8}$-in. top plates and 12 × $\frac{3}{8}$-in. bottom plates riveted across their top flanges. The permanent concrete sidewalk has a buckle plate floor platform retained between a curb girder riveted and knee-braced to the floor troughs and a fascia girder made with a 15-in. channel knee-braced to the cantilever brackets. The inner edge of the sidewalk is protected by a concrete curb 6 in. thick, and more than 2 ft. in its variable height, which is anchored to the web of the curb girder by hook bolts. The temporary granolithic sidewalk has a thin cement bed on the crowned surface of a cinder fill retained between a

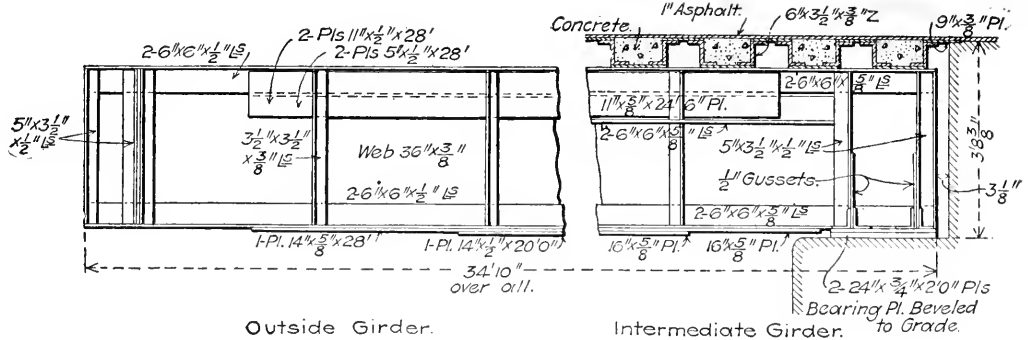

Part Elevation of Light and Heavy Girders.

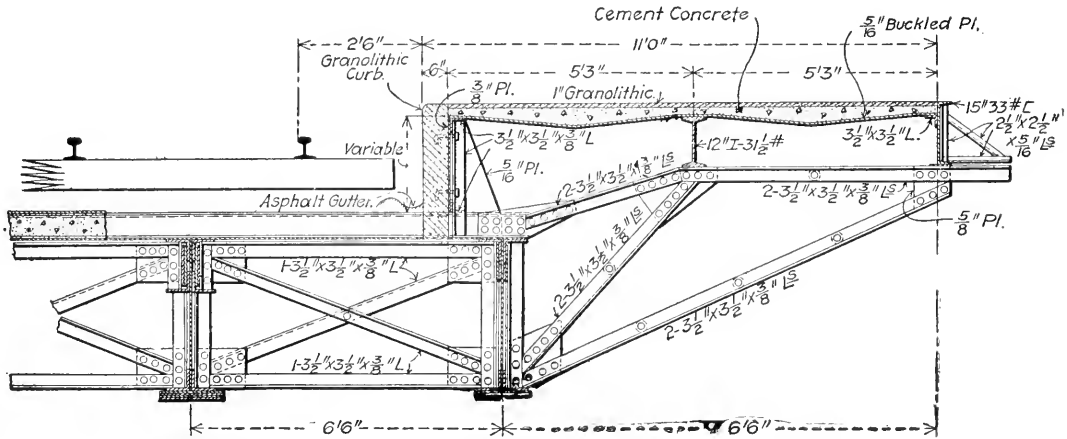

Part Cross-Section and Elevation of Girders. — Oak Lane Bridge.

temporary fascia girder and a concrete curb anchored to by diagonal hook straps field-riveted to the webs of the Z-bar troughs which support the sidewalk, and are intended later to carry the fourth track when sidewalk brackets have been added to the outside girder and the sidewalk shall have been removed to them.

After the completion of the steelwork the floor troughs were filled with 1 : 3 : 6 concrete, the surface of which together with all the steelwork was painted with asphalt dissolved in naphtha. The deck was covered with 1 in. of mastic made with 60 parts, by weight, of Seyssel, Sicilian, or Neufchatel rock, 10 parts refined Trinidad or Bermudez asphalt, and 30 parts of clean sand or grit passing a $\frac{1}{4}$-in. mesh sieve. This surface was covered with $1\frac{1}{2}$ in. of sand, and ballasted for the track.

Père Marquette, 50-ft. Deck.

A 50-ft. deck plate girder span, built by the Pennsylvania Steel Company for the Père Marquette Railroad, has the fixed end supported on the top flange of the transverse girder of a two-column trestle bent and the sliding end supported on a bed plate on the abutment seat. The girders are connected by zig-zag lateral diagonals in the top flange plane and by sway-brace frames all made of single $3 \times 2\frac{1}{2} \times \frac{3}{8}$-in. angles. They are special on account of the different construction of the top and bottom flanges, the latter being of the ordinary T-shape cross-section, made with a pair of angles and a cover plate, and the former having a larger sectional area and so designed that the material is disposed to resist compression and to avoid the presence of rivet heads on the upper horizontal surface which affords a smooth regular bearing for the track ties.

The web is proportioned for an end shear of 121,200 lbs. and is made of two pieces of $68\frac{3}{4} \times \frac{3}{8}$-in. plates spliced with two $7 \times \frac{5}{8}$-in. plates and stiffened by pairs of $5 \times 3\frac{1}{2}$-in. angles which have fillers at the ends of the girders and are crimped in the middle of the span. The web plates are cut $\frac{1}{4}$ in. scant of the full height of the girder from back to back of flange angles so that they may not project beyond the flange angles or need chipping to clear the flange cover plates. The bottom flange is proportioned for a maximum bending moment of 1,287,000 ft.-lbs., and is made with two $6 \times 6 \times \frac{5}{8}$-in. angles, one 29-ft. and one 40-ft. $14 \times \frac{9}{16}$-in. cover plate, making a cross-section of about

30 sq. in. gross and 25 sq. in. net. The top flange is made with two 6 × 6 × ½ in. top angles, two reversed 6 × 4 × ½-in. bottom angles, and two 8½ × ½-in. vertical cover plates 27 ft. long. It has a gross cross-section of 29.5 sq. in., and is stayed by the bearings of the web-stiffener angles on the lower flange and by the track ties dapped over the top flange.

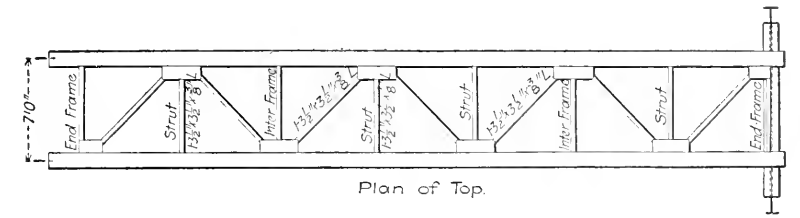

Plan of Top.

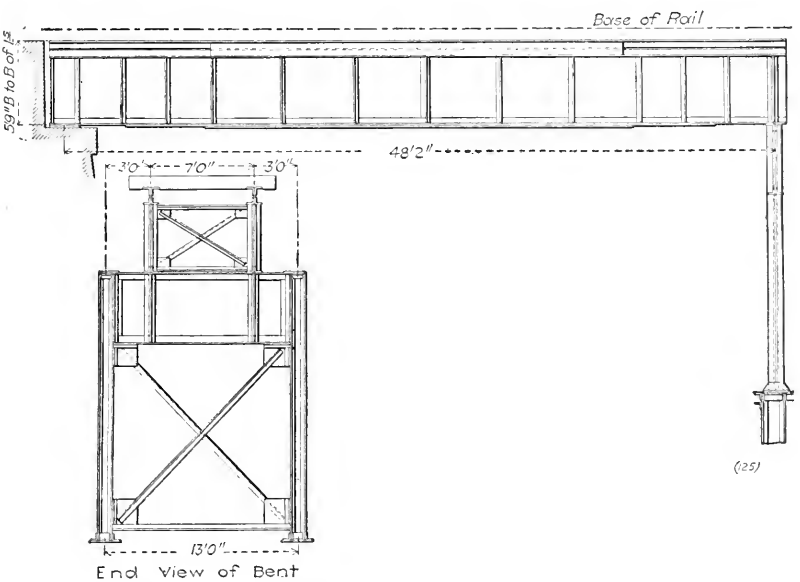

End View of Bent

(125)

Woodsville, 52-ft. Deck.

The single-track bridge of the Boston & Maine Railroad across the Connecticut River near Woodsville, between Woodsville, N.H., and Wells River, Vt., has at one end a single 41-ft. 8½-in., and at the opposite end a 51-ft. 9½-in. deck span. The 41½-ft. span has a 56-in. web and 6 × 6 6½-in. flange angles with a single 14-in. cover plate on each flange. The 52-ft. span has a 66-in. web plate and 6 × 6 × $\frac{7}{16}$-in. flange angles, with two

15-in. cover plates on both flanges. At the river end of the span the girders are web-connected to the end floorbeams of the channel span. At the shore end they are seated on bed plates bolted to the abutment masonry. At this end there is a $\frac{1}{2}$-in. sole plate countersunk-riveted to the lower flange with a $4\frac{1}{2} \times 1$-in. notch in the center of each longitudinal edge to clear the guide lugs on the cast bed plates and allow for temperature movements.

In both spans the girders are spaced 14 ft. apart on centers and are divided into 10-ft. $2\frac{1}{2}$-in. main panels by the 32-in. floor-

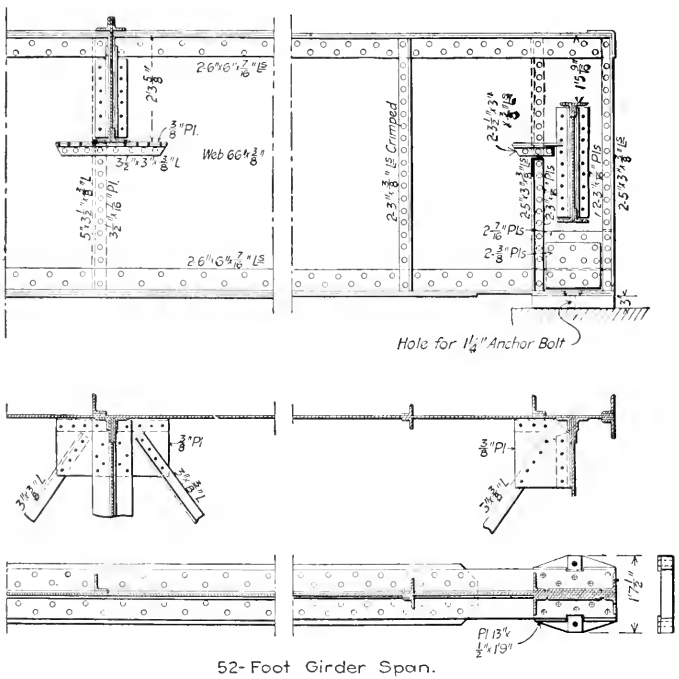

Girder Details and Connections. — Woodsville Bridge.

beams, which are web-connected to them. The shore end floorbeams are set lower than the intermediate floorbeams, so as to support the main stringers directly on their top flanges. The intermediate floorbeams are web-connected to both main and side stringers, and have the upper corners of their webs cut to clear the top flanges of the main girders, to which they are field-riveted through the vertical end connection flanges. The top flange angles are reversed so that their horizontal legs are

down and engage the cover plates of the top flanges of the main girders, to which they are field-riveted. The main and side stringers are respectively 18-in. 60-lb. and 15-in. 42-lb. I-beams corresponding to those in the channel span. Their top flanges are flush with the top flange angles of the main girders, so that the thickness of the track ties carries the rails clear of the top flanges of the floorbeams. The ends of the intermediate floorbeams are seated on, and field-riveted to, horizontal angles which are shop-riveted to the main girder webs and afford connection for the horizontal gusset plates, which are also field-riveted to the bottom flanges of the floorbeams, and receive the ends of the 3 × 3-in. X-brace lateral angles. At the shore end of the span these lateral angles have horizontal connection plates riveted to the webs of both floorbeams and main girders.

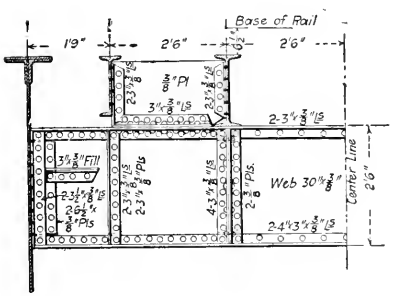

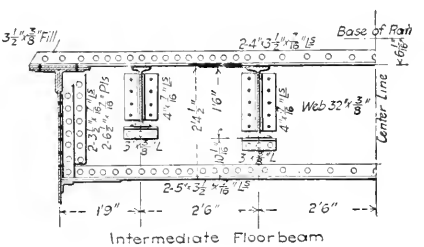

52-Foot Girder Span.

Stringer Diaphragm. Connection of Flange Angles.

Wanda, 60-ft. Through.

Two tracks of the Short Line Division of the Cleveland, Cincinnati, Chicago & St. Louis Railroad over the Illinois Terminal Railroad at Wanda, Ill., are carried on a through bridge of two duplicate 60-ft. 4-in. spans with girders 29 ft. apart on centers and skewed 36 ft. 5½ in. The girders are 90 in. deep with web plates $\frac{5}{8}$ in. deep, and up to 21¼ ft. long, and are spliced with four vertical rows of shop rivets through pairs of cover plates. The maximum flange section is made with two 8 × 8 × $\frac{5}{8}$-in. angles, two 14 × $\frac{5}{8}$-in. side plates, and two 19 × $\frac{9}{16}$ and one 19 × ½-in. cover plates. All flange pieces are in single lengths, so that there are no flange splices.

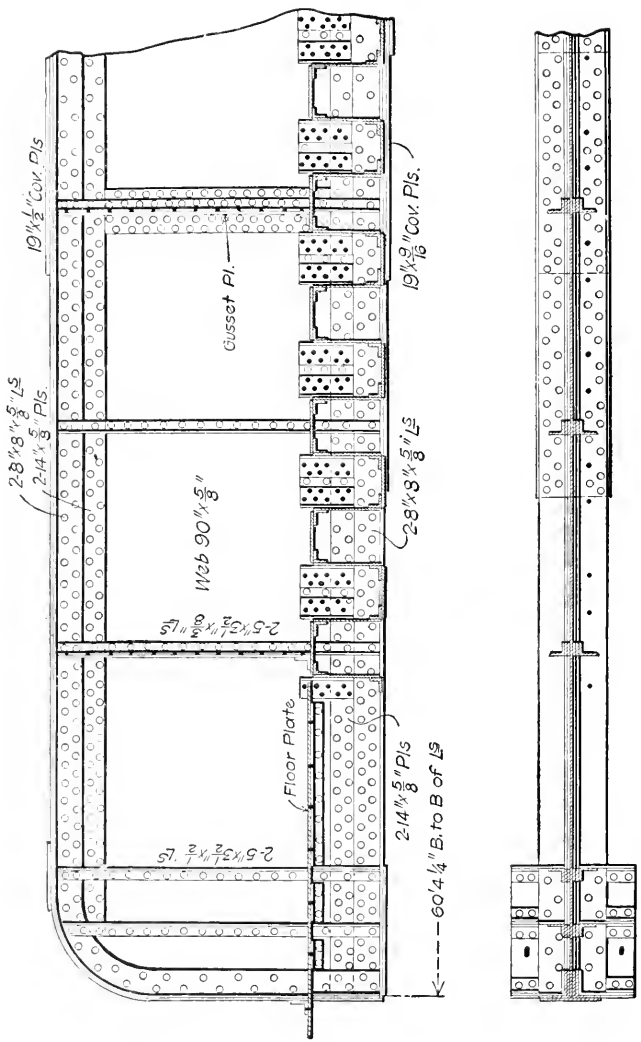

Details of Girder and Floor Connection, — Wanda Bridge.

The web is divided into panels about 5 ft. long by pairs of $5 \times 3\frac{1}{2} \times \frac{3}{8}$-in. angles at splices and intermediate points and fillers.

The upper corners of the shore ends of the girders are rounded to a radius of 28 in., and the top chord flange angles are cut off tangent to these curves, and the end vertical web-stiffener angles, of the same size as the flange angles, are made long enough to be curved to the corner radius and spliced tangent to the flange angles by short cover plates. Much difficulty was experienced in bending these angles, and in other

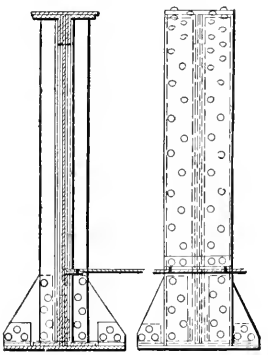

End View and Cross Section through Sole Plate.

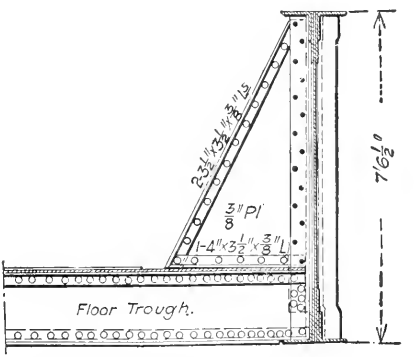

Sway Brace and Floor Trough Connections.

similar designs for the same railroad they have been made with a smaller-size angle, but the width of the flange has been maintained continuously by the use of a uniform width of cover plate.

The girder bearings are made with sole plates 15 in. wider than the bottom flange, which have their projecting edges stiffened by three vertical transverse gusset plates and connection angles. At both ends of the girder these plates are seated on planed bed plates $1\frac{1}{16}$ in. thick, and have two slotted holes for 1-in. anchorbolts at the expansion end, and four round holes at the fixed end. In long-span girders recently built by the same road, the anchorbolt holes are slotted at both ends. There are no floorbeams, stringers, or lateral braces, but the girders are rigidly connected by a solid floor of rectangular troughs about 19 in. deep and 15 in. wide, made with plates and angles, and connected directly to the girder webs just clear of the bottom flange angles by short pairs of field-riveted angles on each

trough web. At alternate panel points the girders are sway-braced by vertical transverse gusset plates forming triangular kneebraces flange-riveted to the troughs and field-riveted to the web-stiffener angles.

Erie Bridge, 75-ft. Through.

Bridge 421½ of the Lake Erie & Western Railroad is a single-track through plate girder of 75-ft. span out to out, with abutments skewed 37 degrees 10 minutes to the bridge axis and the track on a 2-degree horizontal curve. The girders are 15½ ft. apart on centers, and have rounded upper corners. The webs are 7 ft. deep, shop-spliced in three sections, and stiffened by pairs of 5 × 3½-in. vertical angles and fillers from about 7 to 10 ft. apart. The flanges are of the ordinary T-shaped section made with pairs of 6 × 6 × ¾-in. angles and pairs of 14 × ¾-in. cover plates. The bed plates at both ends have ¼-in. sheet lead packing on the masonry, and at one end there are ten 2-in. rollers under each girder. The girders are sway-braced by solid gusset plates reaching from the top flange to the solid floor and riveted to the inside vertical web-stiffener angles, which are curved at right angles at the bottom, and form continuous connections which are riveted to the top flanges of the floor-beams.

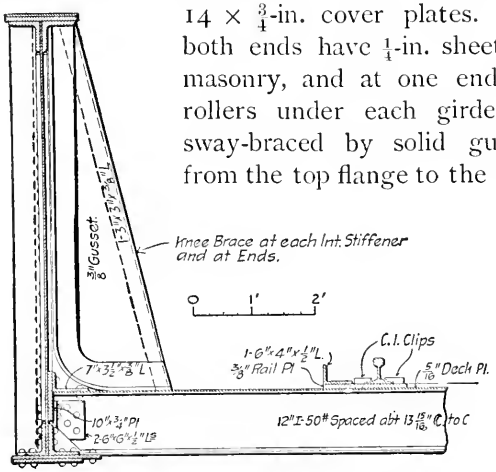

Half-cross Section of 75-foot Span.

The span is proportioned for a dead load of 1700 lbs. per lin. ft., a live load of two 100-ton consolidated locomotives followed by 3000 lbs. train load per lin. ft., and an impact of 15 per cent for the girder and of 25 per cent for the floor. These produce a maximum moment of 2,007,300 lbs. in the flanges and an end shear of 124,700 lbs.

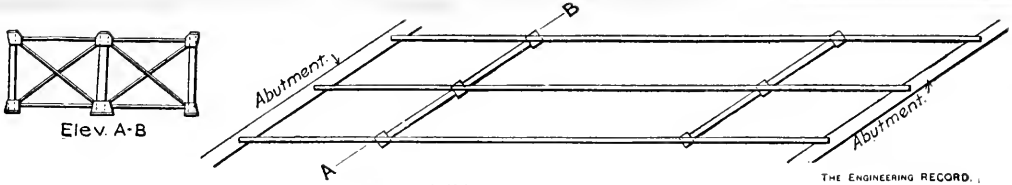

General Plan and Elevation.

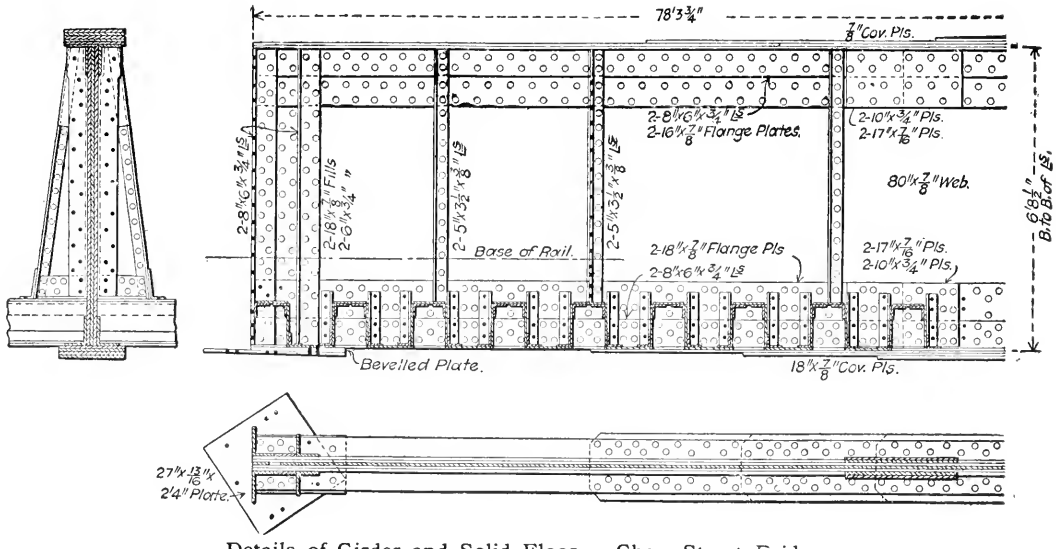

Details of Girder and Solid Floor. — Chew Street Bridge.

Chew Street, 78-ft. Through.

The bridge of the Germantown & Chestnut Hill branch of the Philadelphia & Reading Railway over Chew Street at Walnut Lane, Philadelphia, is a three-span double-track through plate girder structure. The three 78-ft. $3\frac{3}{4}$ in. center span girders are supported on the caps of six vertical columns about 14 ft. long, which also receive one end of the short-span girders, supported at the other end on the masonry abutments. Each column has an H-shaped cross-section made with a web plate, two flange plates and eight flange angles; the three columns in each bent are X-braced together by pairs of angles latticed, and have horizontal top and bottom channel struts.

The main girders are very heavy for their dimensions, and have web-plates 80-in. deep and $\frac{7}{8}$ in. thick in 15 to 18 ft. lengths, spliced with pairs of $14 \times \frac{1}{2}$-in. cover plates, with four vertical rows of shop-driven rivets.

The maximum flange section consists of two $18 \times \frac{7}{8}$-in. side plates, two $6 \times 8 \times \frac{3}{4}$-in. angles, and five $18 \times \frac{7}{8}$-in. cover plates. The cover plates and angles are made in single pieces; the side plates are made in two pieces each, with the joints staggered on opposite sides of the web, but opposite each other in the top and bottom flanges, and spliced in each of the four places by two cover plates and two fillers. The ends of the girders are field-riveted to the side-span girders through the vertical web-stiffener angles, and the girders are connected by transverse rectangular floor troughs made with 8-in. top plates, 11-in. side plates, and 12-in. bottom plates. Their bottom plates are flush with the lower flanges of the girder, and they are field-connected to its web by four field rivets in a vertical angle at each end of each plate. The vertical web stiffeners are cut to clear the floor troughs, and at alternate panel points are connected with them by narrow gusset plate kneebraces with flange angles.

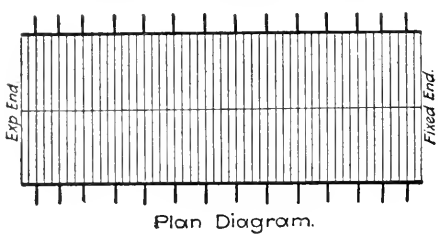

Floorbeams and Girders.

Forest Park, 80-ft. Through.

Bridge 11, of the Wabash Railroad at Forest Park, St. Louis, is a two-track structure of $71\frac{1}{2}$ ft. clear span. It has three through plate girders 96 in. deep back to back of angles, 80 ft. long over all, and 15 ft. apart on centers. It has a solid floor of reinforced concrete and I-beams, and carries a 3-ft. cantilever sidewalk on each outside girder. It is made of medium open hearth steel, sub-punched and reamed, designed for the regular loading, and built under the standard specifications of the Wabash Railroad.

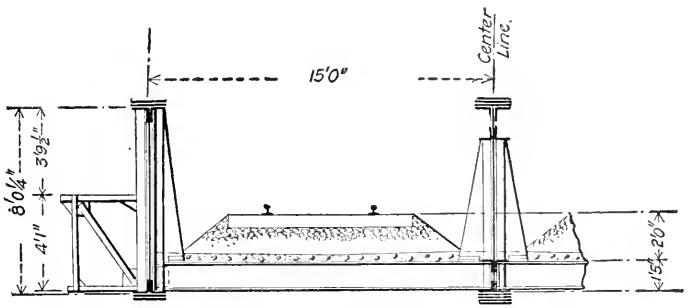

Half Cross-Section.

Floor System and Tranverse Bracing.

The girders have the upper corners rounded to a 30-in. radius around which the end vertical web-stiffener angles, of the same size as the flange angles, are curved and are spliced, about 5 ft. from the ends, to the flange angles with short pairs of cover angles. The webs are divided into intermediate panels, 6 ft. 2-in. long and shorter end panels by double pairs of $5 \times 3\frac{1}{2} \times \frac{5}{8}$-in. vertical web-stiffener angles, back to back.

They have fixed and expansion bearings on flat planed sole and bed plates, stiffened by transverse vertical webs or diaphragms to distribute the load and diminish the unit masonry pressure, as shown by the detail page. The 15 in. 45-lb. I-beam floorbeams are $18\frac{1}{2}$ in. apart on centers in the middle of the span, and 19 in. at both ends. Each beam is web-connected to each girder with 10 field rivets, and at panel points the top flanges are field-riveted to narrow kneebrace plates, without inclined flange angles, shop-riveted between the web-stiffener angles.

The center girder has H-shape top and bottom flanges with a maximum cross-section of four 8 × 8 × ¾-in. angles, two 2¾ × ¾-in. side plates, and four 18 × ¾-in. cover plates. The inside flange angles are about 73½ ft. long, cut to clear the end web-stiffener angles, and are remarkable for having a 3-in. clearance with the outside flange angles, which is given them in order to provide space between the horizontal legs for the floorbeams. The web is ¾ in. thick throughout, and has five joints, each spliced with two 17½ × ⅜-in. and two 14 × ½-in. cover plates with 60 rivets in four vertical rows, and with two pairs of 16 × ½-in. horizontal plates, each with 46 rivets in five horizontal rows. In the end panels the web is reinforced to a total thickness of 2¼ in. in the upper part and to 3¼ in. in the lower part where the outside plates form a cover over the miter joint between the bottom flange and end web stiffener angles.

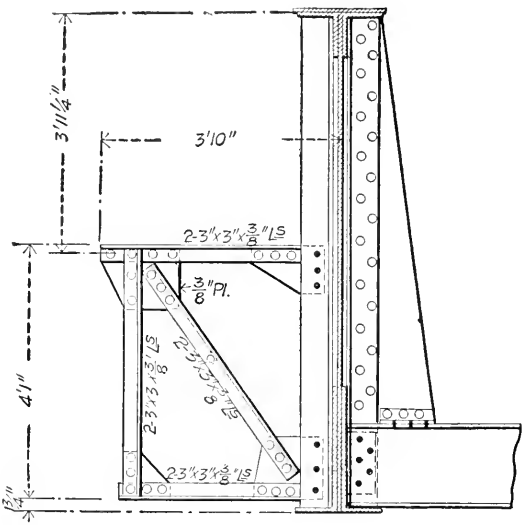

Section B-B.
Sidewalk Bracket.

Cross Section of Outside Girder.

The sole plates project 13½ in. beyond both edges of the lower flange angles, and are stiffened by pairs of distributing gussets or webs riveted to the vertical web-stiffener angles in three vertical transverse planes. They are 1¼ in. thick, and are seated on bed plates of the same size planed to 1¾ in. thick with a 2⅛ × ¼-in. center longitudinal guide rib and four 1½-in. anchorbolts, which, at the expansion end, pass through holes slotted to 3 in. long in the sole plates. The top flanges of the floorbeams at panel points are riveted to pairs of short horizontal angles shop-riveted to the ends of the gusset plates below the lower ends of the vertical web-stiffener angles which are cut to clear them. All field rivets are reamed to iron templates.

The side girders differ from the center girder in the shape of the flanges, in the materials, and in that they have rectangular sidewalk brackets made with pairs of 3 × 3-in. angles cantilevered from the outer sides and riveted to the vertical web-stiffener angles. The maximum flange section is composed of two 8 × 8 × $\frac{3}{4}$-in. angles, and three 18 × $\frac{3}{4}$-in. cover plates. The first cover plate has two joints spliced by the projecting ends of the second

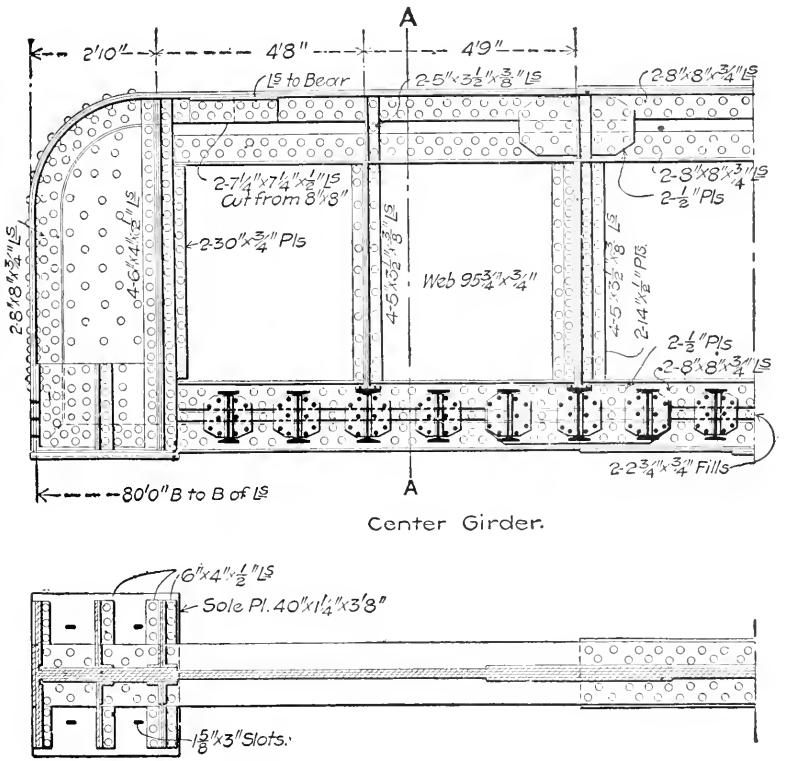

Details of Heavy Girder. — Forest Park Bridge.

plate. The web is $\frac{3}{8}$ in. thick throughout, and has four joints spliced with two pairs of top and bottom horizontal 12 × $\frac{3}{8}$-in. plates clearing the flange angles, and one pair of 14 × $\frac{3}{8}$-in. vertical plates clearing the horizontal plates. Besides these the filler plates and the pairs of web-stiffener angles riveted together back to back have some splicing efficiency. There are in all 90 shop-driven and 15 field-driven rivets (the latter being in the floorbeam connections)

through the splice plates of each joint. One of each pair of inside vertical web-stiffener angles is cut to clear the floorbeam, and the other one continues to the horizontal leg of the bottom flange angle, and has five field rivets through the beam web. The sole plates project only 3½ in. beyond the edges of the bottom flange angles, are not stiffened by vertical web plates, and have only two anchorbolts in each.

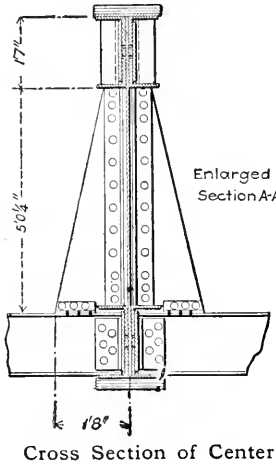

Cross Section of Center Girder.

Bethlehem Junction, 80-ft. Through.

A through single-track plate girder bridge with a clear span of 80 ft. carries the Bethlehem spur of the Lehigh and Susquehanna divisions of the Central Railroad of New Jersey over the Lehigh Canal at Bethlehem Junction. The new bridge has two plate girders, 9 ft. 6½ in. deep, back to back of angles, which are 18 ft. 10 in. apart on centers and are

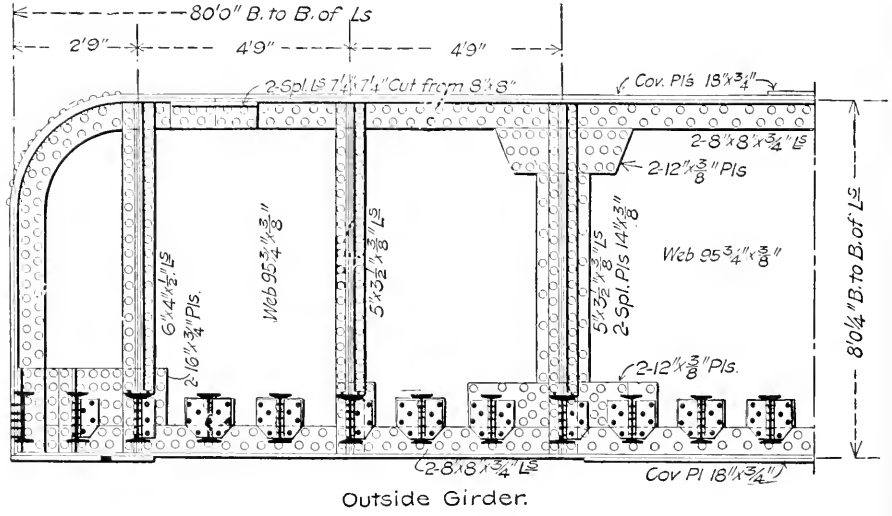

Details of Light Girder. — Forest Park Bridge.

skewed 10 ft. 10 in. They are proportioned for the standard loading of two 375,000-lb. locomotives, each having four pairs of driv-

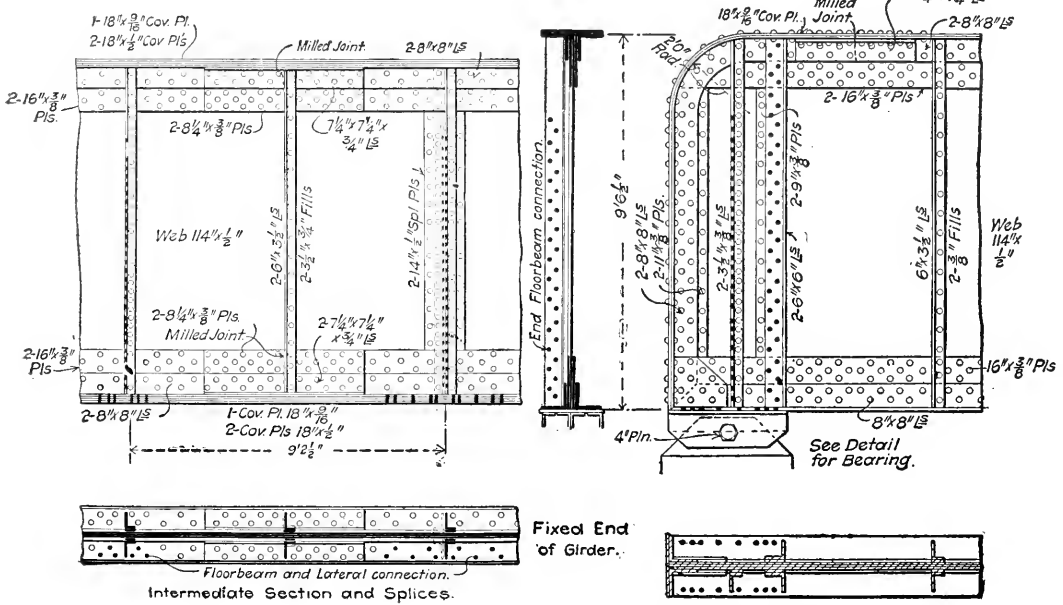

Details of Bridge over Lehigh Canal.

ers 5 ft. apart with 55,000 lbs. on each axle. The locomotives are followed by a live load of 5000 lbs. per lin. ft., and the bridge is assumed to have a total dead load of 2800 lbs. per lin. ft. The track is laid across the bridge on a 10-degree curve, and an average speed of 20 miles an hour is assumed for the trains. Owing to the limited clearance under the base of rail, the floorbeams are only $27\frac{1}{4}$ in. deep and 9 ft. $2\frac{1}{2}$ in. apart. The maximum end shear and bending moment in the girders are 265,500 lbs. and 4,891,200 ft.-lbs. respectively; in the floorbeams 68,000 lbs. and 383,000 ft.-lbs., and in the stringers 56,000 lbs. and 97,000 ft.-lbs.

The bridge was built of open hearth medium steel under Cooper's 1901 specifications, and some of the most essential features were briefly noted on the principal drawings as follows:

All holes through bottom flange angles, bottom cover and side plates and web at bottom to be punched $\frac{13}{16}$ in. in diameter and reamed to $\frac{15}{16}$ in. in diameter. All holes for field-riveting excepting those through outstanding legs of bottom flanges to be reamed to an iron template or reamed true while the parts are temporarily connected together in the shop. All stiffener angles, web splice plates, and reinforcing plates at ends of girders to be milled to bear at both ends. All flange angles, flange side plates, and top cover plates to be milled to bear at both ends. All bottom cover plates and bottom flange splice plates and angles to be faced at both ends. All holes for bottom flange splice plates and angles to be reamed.

The details of the main girders correspond to those shown by the elevations of the end and intermediate panels. The web is $\frac{1}{2}$ in. thick throughout, and is made with end sections about $12\frac{1}{2}$ and 20 ft. long and intermediate sections 18 ft. $4\frac{3}{4}$ in. long. They are spliced with double cover plates having their ends milled to bearing on the flange side plates, and each section is stiffened by three intermediate pairs of $6 \times 3\frac{1}{2}$-in. vertical angles crimped over the flange angles, fillered over the webs between the side plates and milled to bearing at both ends. At splices the stiffener angles are not crimped. Each flange cover plate is made in a single piece, but the flange angles are each made in two pieces, with their splices at opposite ends of the girder on opposite sides of the web. At each splice the joint is made for the flange angle on one side of the web and for the side plate on the opposite side of the web, both of them being covered by the same pair of cover angles and cover plates. The

ends of the plates and angles are milled at the joints, and the ends of the lower chord cover plates are faced.

The upper corners of the girders are rounded to a radius of 2 ft., and the top flange angles are cut off about 3 ft. from the end of the girder tangent with the ends of the short vertical angles of the same size which are curved to meet them. The ends of the angles and of the cover plate at this point are milled. If the end vertical angles and the lower chord angles extended to intersect, the former would have to be crimped to clear the latter. In order to avoid this, both angles are cut as shown in the detail, and their ends are faced to bearing with a cover plate riveted over the miter joint in the angles.

The girders take bearing on $4\frac{3}{4}$-in. pins 84 ft. 6 in. apart on centers. The pins engage shoes riveted to the lower flanges of the girders and pedestals with fixed bearings at one end and expansion bearings at the opposite end. (See page 175.)

The floorbeam webs are made in three lengths, the two end sections projecting beyond the top flanges to make gusset connections reaching to the top flanges of the main girders, and connected to them by twenty-nine $\frac{7}{8}$-in. field rivets to the vertical web-stiffener angles. The end floorbeam connections are so near the adjacent 6 × 6-in. web-stiffener angles that the latter are omitted until after the floorbeams are in place, so as to allow a better opportunity for driving the field rivets. They are then field-riveted to the girders, and on this account the number of rivets in them is in excess of those for the other stiffeners.

The stringers are made with an 18 × $\frac{5}{8}$-in. web plate and pairs of 6 × 6 × 17.2-lb. flange angles, and are connected to the floorbeams by twenty $\frac{7}{8}$-in. rivets at each end. The end stringers are all made of the same length, and are supported on special seats offset from the skew of the abutments so that all ties rest wholly on the stringers or wholly on the shore, the tops of the abutments being rebuilt to suit. The lateral system consists of pairs of $3\frac{1}{2}$ × $3\frac{1}{2}$-in. angles riveted to connection plates engaging the lower flanges of the girders and of the floorbeams and riveted through fillers to the bottom flanges of the stringers at intersections. At these points the diagonals are cut to clear the stringers, and are spliced across them by $\frac{1}{2}$-in. horizontal plates 12 in. wide. The connection plates to the girders are slotted to clear the outstanding flanges of the web-stiffener angles. The shore ends of the end stringers are braced

to one girder by an I-shape horizontal strut made with two pairs of angles back to back, latticed and field-riveted to the web-stiffener angles of the girder. Each main girder weighed 65,000 lbs., and was riveted complete in the shop, and both were shipped whole on three cars. The total weight of the bridge is 225,000 lbs.

CHAPTER X

SPANS OF 84 TO 106 FT. INCLUSIVE

Lebanon Valley, 84-ft. Through.

THE double-track through plate girder span which carries the two tracks of the Belt Railroad over the Lebanon Valley Crossing, is typical of recent standard practice of the Philadelphia & Reading Railway Company. There are two girders 83 ft. 9 in. long, and about 10 ft. deep over all, which are considerably skewed and have an unusually deep, solid floor at lower flange level, which is knee-braced to the top flanges and dispenses with floorbeams, stringers, and lateral diagonals. The girder web is made of $112 \times \frac{5}{8}$-in. plates in sections from about 20 to $22\frac{1}{2}$ ft. long, spliced by pairs of $14 \times \frac{1}{2}$-in. cover plates with four vertical rows of rivets. They are stiffened with pairs of vertical angles, those on the inside being cut to clear the floor troughs and fillers. These divide it into panels of a uniform length of $6\frac{3}{4}$ ft., except at the ends where they are shorter, and there is a double pair of angles nearly over the centers of the bearings, and there are three pairs of transverse vertical plates which make a heavy compression member and give increased stability by widening the base.

The maximum flange section is made with two $6 \times 8 \times \frac{7}{16}$-in. flange angles, two $18 \times \frac{7}{8}$-in. cover plates, and three $18 \times \frac{13}{16}$-in. cover plates. The cover plates are made in single lengths, having a maximum length of 74 ft. $1\frac{1}{2}$ in., and the flange angles are each made in two pieces, 44 ft. $11\frac{1}{2}$ in. and 37 ft. $\frac{1}{4}$ in. long, breaking joints on opposite sides of the web in the same flange. The splices are opposite each other in the top and bottom flanges, four in all, at each end of the girder; each of them, although covering but one angle, is made with two $6 \times 8\frac{3}{4} \times$ -in. angles sheared to $7\frac{1}{8} \times 5\frac{1}{8}$ in. to act as covers.

The bearings at both ends are alike, and are made with $32 \times 11\frac{1}{16} \times 48$-in. planed sole plates, which project 7 in. each side of the flanges, and have their edges stiffened by bearings on the bottoms of the three transverse vertical gusset plates

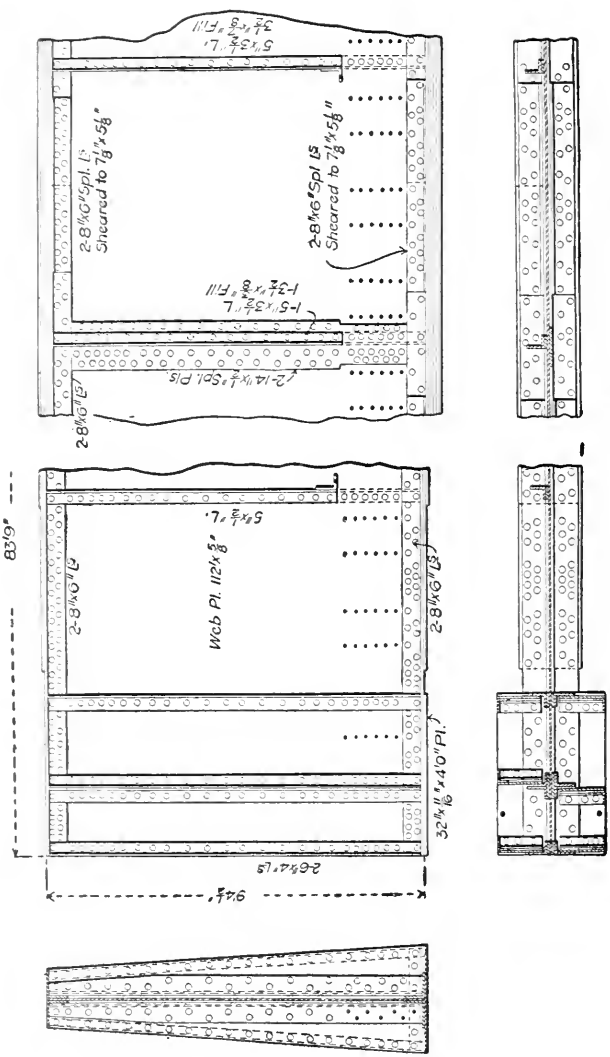

Details of Girder with Floor Removed.—Lebanon Valley Bridge.

riveted to the web-stiffener angles. The rectangular floor troughs are made with plates and angles, and are $23\frac{1}{2}$ in. deep and 11 in. wide, and are connected to the girder webs with six field rivets in a vertical angle shop-riveted to each end of each side plate. The girders weigh about 38 tons each, inclusive of about 46,000 lbs. of cover plates, and were riveted up complete in the shops, leaving only the floor trough and gusset plate connections to be field-riveted.

Grand Trunk, 87-ft. Deck.

A single-track deck plate girder span of the Grand Trunk Railroad at mile post $34\frac{1}{2}$, fifth district, and a duplicate one at mile post $43\frac{3}{8}$, fifth district, were built in 1903 with pairs of plate girders $87\frac{1}{2}$ ft. long, 8 ft. deep, and 7 ft. apart on centers. They were set parallel with the grade of 0.47 : 100 with beveled sole plates seated on roller nests at the expansion ends and on planed bed plates at the fixed ends. The $\frac{1}{2}$-in. web plates were made in sections nearly 8 ft. long, spliced with double cover plates and four vertical rows of rivets. Each splice was stiffened with a pair of vertical angles, and extra pairs were provided over the end bearings as shown in the elevation. The top and bottom flanges were unlike, the latter having a T-shape cross-section made with two 8 × $4\frac{1}{2}$-in. angles and several thicknesses of $16\frac{1}{2}$-in. cover plates, and the former having an H-shape cross-section built up with two pairs of 8 × $4\frac{1}{2}$-in. angles and two 14 × $\frac{3}{4}$-in. web plates and no cover plates, and reinforced in the center by a pair of 7 × $\frac{7}{16}$-in. cover web plates. The girders are connected at alternate panel points by sway-brace frames made with single angles, and by top and bottom zigzag lateral angles.

Oriskany, 87-ft. Through.

The through double-track bridge of the New York Central & Hudson River Railroad at Oriskany, N.Y., is designed to carry heavy and fast trains, and its construction was considered unusually massive when it was built in 1900. The middle girder is proportioned for the full load from two-tracks, is 86 ft. long, 10 ft. $\frac{1}{4}$ in. high, and weighs 142,000 lbs. The other two girders are similar to it but are lighter. They are connected by a solid floor of rectangular transverse troughs of the standard design adopted by the railroad company. The girders are web-

connected to the troughs which just clear the lower flanges. Sway-bracing is provided by solid kneebrace plates riveted to the troughs and to the vertical web-stiffener angles.

The girders take bearing on sole plates, countersunk-riveted to the ends of their lower flanges, and projecting some distance beyond the edges of the latter. (See page 126.) The web plates are 10 ft. deep, planed on all edges, and vary from 1 in. thick and 9 ft. $2\frac{3}{16}$ in. long at the ends to $\frac{1}{2}$ in. thick and 13 ft. $7\frac{5}{16}$ in. long at the center. They are spliced with pairs of vertical plates which, at the ends, are 24 in. wide, $\frac{5}{8}$ in. thick, and have eight vertical rows of staggered rivets. The

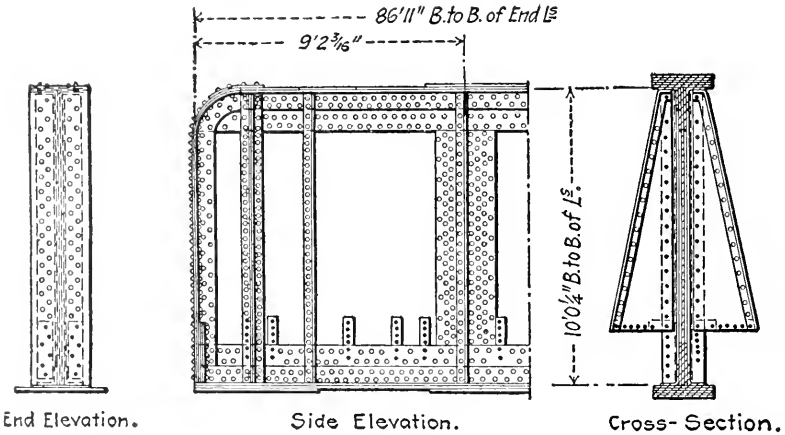

Center Girder.
Oriskany Bridge.

15 × $\frac{3}{8}$ in. middle splice plates have only four rows of rivets. At each splice and midway between them there is a pair of 6 × 4 × $\frac{1}{2}$ in. vertical web-stiffener angles with fillers all machined to end bearings. The top and bottom chords are substantially alike except that the bottom chord has one more flange cover plate than the top chord. Each has two $16\frac{1}{2}$ × 1-in. side web plates and two 8 × 8 × 1 in. flange angles throughout. Both chords have several thicknesses of flange cover plates 24 in. wide. In the top chord there are, in the middle, five plates with a combined thickness of $4\frac{9}{16}$ in. in the bottom chord, six plates with a combined thickness of $5\frac{9}{16}$ in. The upper corners of the girders are rounded to a radius of 18 in., and the end stiffener angles are made of uniform width with the top chord angles and continued

around the curve to abut with them at the point of tangency, thus avoiding bending long angles. A $\frac{1}{2}$-in. cover plate is riveted to the backs of the end angles, and the joint is covered with a thin plate. Each chord angle is made in two lengths; the joints are staggered on opposite sides of the girder, and are each spliced with a 5 × 1-in. horizontal plate and a 5 × 5 × 1-in. cover angle. All flange rivets are 1 in. diameter, and all others $\frac{7}{8}$ in. There are no floorbeams or lateral or sway brace systems. Transverse stiffness is secured by the deep, solid floor and by the stiffened gusset plates attached to it and to the vertical web stiffeners, as shown in the cross-section.

Both fixed and roller ends have sole plates seated on riveted ribbed bed plates, wider than the bottom flanges, as shown in the detail page 154.

Each girder was loaded on two Pennsylvania Railroad gun trucks of 100,000 lbs. capacity each, separated by an idle spacer car. Each end of the girder was seated on a pair of horizontal transverse sills, bolted together and extending across the car floor, to which they were secured in the center by a vertical 2-in. kingbolt. The bolt was countersunk into the top of the sill, and allowed the girder to swivel in passing around curves. The ends of the sills were shod with iron plates, and rested there and in the middle on longitudinal steel track plates, bolted to the car floor. The ends of the sills were braced to the under sides of the top chord flanges by pairs of inclined timbers connected to them by bent plates at the bottom, and connected together at the top by yoke plates over the top flange of the girder. Each sill was braced at right angles to the girder by a pair of horizontal rods passing through its ends, with nut and washer bearings and loop eyes engaging temporary bolts through rivet holes in the bottom flange of the girder near the end.

Reading Belt, 89-ft. Through.

The double-track through plate girder skew bridge for the crossing of the Reading Belt Railroad over the tracks of the Pennsylvania Schuylkill Valley Railroad has two 89-ft. 4-in. girders, 96 in. deep, with a beam and stringer floor. The web has a uniform thickness of $\frac{5}{8}$ in., and is made in lengths of from 18 to 25 ft., spliced with double cover plates, and six vertical rows of rivets. The upper edges of the middle, intermediate, and end sections of the web are $\frac{1}{8}$, $\frac{3}{16}$, and $\frac{7}{32}$ in. longer than the respec-

tive lower edges to frame a camber of 1 in. in the girder. The maximum flange section consists of two $6 \times 8 \times \frac{7}{8}$-in. angles with the 6-in. flange vertical, and three $20 \times \frac{7}{8}$ and three $20 \times \frac{13}{16}$-in. cover plates. The cover plates are without splices, the longest being about 72 ft. long. Each flange angle is made with a 29-ft. 4-in. and a 60-ft. length, all joints being opposite each other, and spliced with pairs of $8 \times 6 \times \frac{29}{32}$-in. angles 4 ft. long, milled on the back to fit the root of the flange angle, and having the flanges project slightly beyond the flanges of the girder angles.

The floorbeams are 11 ft. $4\frac{1}{2}$ in. apart, and their lower flanges are flush with those of the girders. The ends of their upper flanges are flange-connected to triangular gusset plates bracing them to the webs of the girders. Horizontal connection plates are riveted to the girder and floorbeam lower flanges to receive the lateral diagonal angles. The girders are seated on cast pedestals and rockers at the fixed and expansion ends, and weigh about 88,000 lbs. each, including the 48,008-lb. cover plates. They were shop-riveted complete.

Ship Pond Stream, 100-ft. Through.

Bridge No. 274C of the Canadian Pacific Railway is a viaduct about 1200 ft. long and 120 ft. high, at Ship Pond Stream, Me. It is a single-track deck structure with 30 and 60-ft. alternating spans except at the center, where there is a 100-ft. span over the water. The accompanying drawings illustrate the typical features of the 100-ft. span, which is built with the upper corners of the girder webs recessed to afford seats for the adjacent 30-ft. girders. The girders are 102 ft. 4 in. long over all, have a depth of 9 ft., back to back of angles, are cambered $\frac{3}{4}$ in., and are spaced 10 ft. apart on centers.

The webs have a uniform thickness of $\frac{3}{8}$ in. and lengths of $165\frac{1}{2}$ in., and the splices are uniformly made with a pair of $13 \times \frac{5}{16}$-in. cover plates with $120\frac{7}{8}$-in. shop-driven rivets in four vertical rows, exclusive of the rivets through the flange angles, which are continuous across the web splices. The flanges have a maximum cross-section composed of two $8 \times 8 \times \frac{5}{8}$-in. angles, four $18 \times \frac{5}{8}$-in., and one $18 \times \frac{11}{16}$-in. cover plates, one of which extends the full length of the girder, and is made in two pieces about 49 ft. and $53\frac{1}{2}$ ft. long, which are spliced at the joint by the overlapping end of the outside cover plate. The

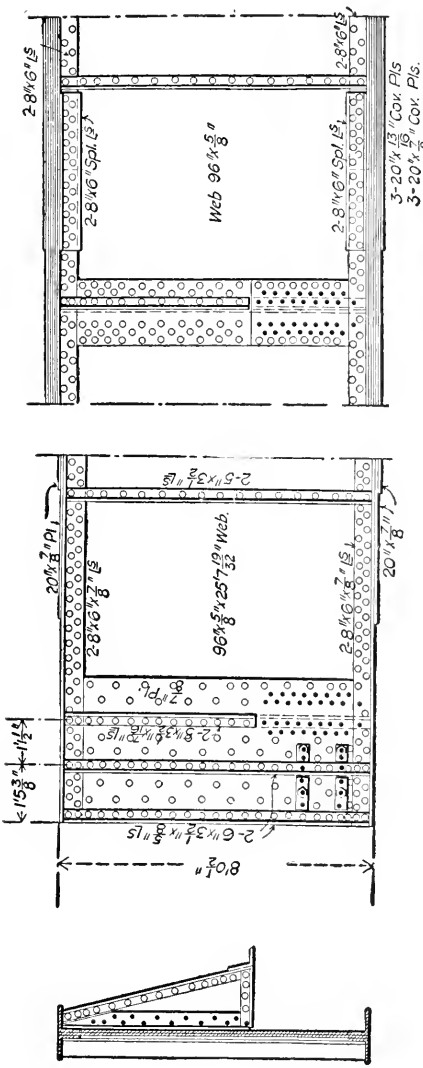

An 89-Ft. Skew Plate-Girder Reading Belt R.R.

flange angles are each made with one piece 58 ft. $1\frac{1}{4}$ in. long, and one piece 44 ft. $2\frac{3}{8}$ in. long, the joints being opposite each other in the top and bottom chords and staggered on the opposite sides of the web. Each joint is spliced by a single $8 \times 8 \times \frac{11}{16}$-in. angle $6\frac{1}{2}$ ft. long, planed down to $7\frac{3}{8} \times 7\frac{3}{8}$ in. wide.

The girders are divided into panels of a uniform length of 6 ft. 11 in., except at the ends, where they are shorter, by pairs of $5 \times 3\frac{1}{2}$-in. vertical angles, which are crimped, except at the splices and at the ends. At the ends and at alternate panel

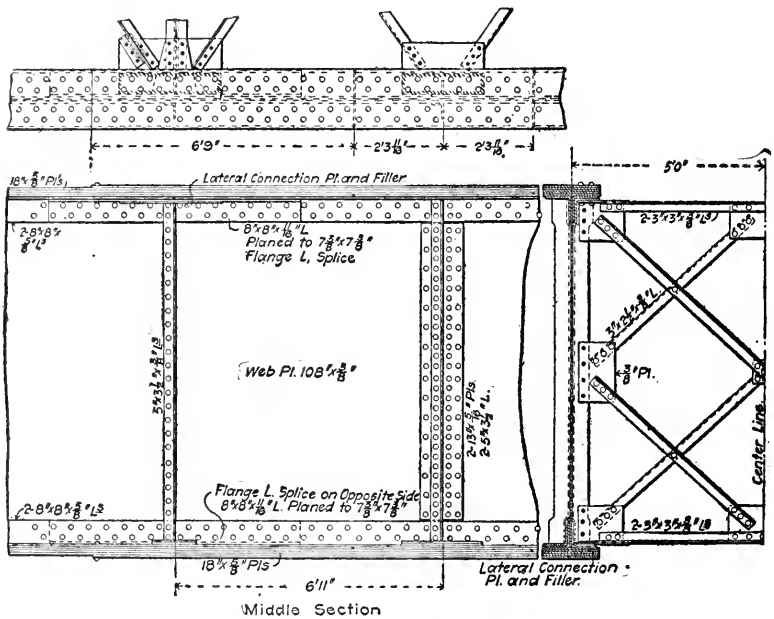

Flange and Web Splices, Tranverse and Lateral Bracing. — Ship Pond Bridge.

points, which are intermediate between the web splices, the girders are connected by vertical transverse sway-brace frames made, as indicated in the half cross-section, with four panels of X-brace angles. At every panel of the girder horizontal connection plates are riveted to the inner sides of the flange angles to receive the zigzag top and bottom lateral bracing, which is made with single angles from 3 to 6 in. wide. The connection plates at the intermediate panels are riveted to the sway-brace frames, and all of those in the top system have fillers between them and the lower flanges, so that the ties will not have to be

cut to clear the lateral angles. The lateral angles are in reverse directions in the upper and lower systems, so that their planes intersect in each panel.

At the ends of the girder the webs are reinforced by side plates and additional vertical stiffener angles to resist the end-shear and form adequate compression members between the bearings of the 30-ft. girders and the main bearings on the towers. The horizontal angles forming the seats for the 30-ft. tower girders have riveted steel cap plates, on which are seated planed bed plates with longitudinal guide ribs on the center line. These engage corresponding shoe plates riveted to the ends of the 30-ft. girders and secured by $1\frac{3}{4}$-in. bolts through slotted holes at the expansion end and through round holes at the fixed end.

The bearings for the main girders are of a special type adopted as standard by the Canadian Pacific Railway Company, and designed to provide full and accurate bearings, regardless of deflection or any minor irregularities of level and alignment. (See page 204.) These consist of spherical convex and concave surfaces, which provide considerable adjustment for the girders, and are used instead of pin bearings. They dispense with ordinary shoes and pedestals, and are seated on bolsters and regular rollers at the fixed and expansion ends, respectively. The sole plates, countersunk-riveted to the girder flanges, are of rolled steel $1\frac{3}{4}$ in. thick, and project $7\frac{1}{2}$ in. beyond the edges of the flange. A spherical recess with a radius of $19\frac{5}{8}$ in. is bored in the center to a depth of 1 in., and a 3-in. hole is bored through the remainder of the plate on the center line. The recess engages the upper surface of a cast steel disk of corresponding convexity and 15 in. in diameter. This disk has a total thickness of $2\frac{1}{2}$ in., and the lower edge is cylindrical and is seated in a recess bored in the upper side of the cast pedestal at the fixed end and in the top of the upper roller-bearing plate at the expansion end. In either case it is secured by a vertical center bolt with countersunk head, which is tapped into the roller plate or pedestal.

The roller plate is made with a center guide strip, and the four edges are curtained by the vertical flanges of two transverse angles riveted to the ends of the plate and by vertical plates tap-bolted to its side. These together form a tight inclosure for the nest of seven segmental rollers. The rollers are made with vertical sides, precluding the possibility of lock-

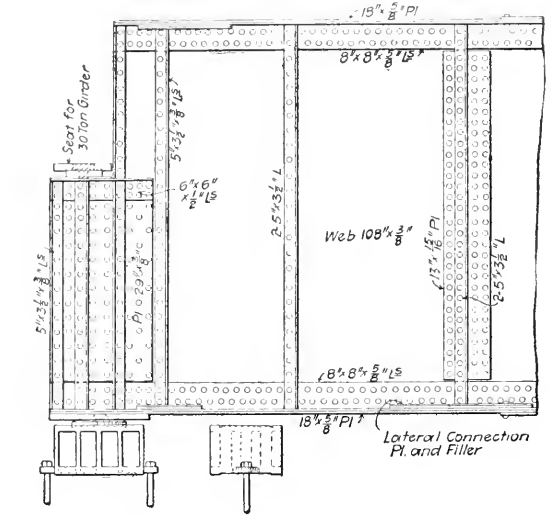

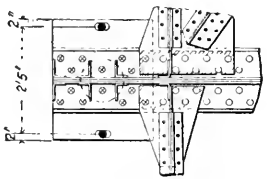

DETAILS AT END.

Fixed End of New 102'4" Girder.

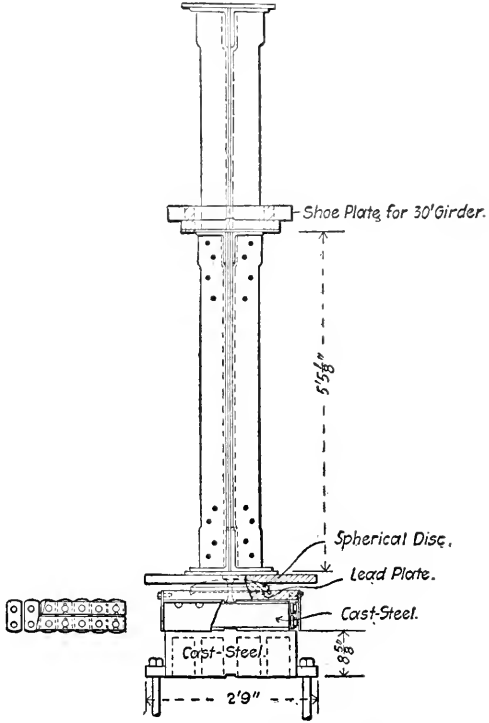

Expansion End of Girder.

END TRANSVERSE ELEVATION OF ONE GIRDER.

Ship Pond Bridge.

ing together when deflected from the vertical. They are seated on cast steel pedestals $8\frac{5}{8}$ in. high, which are made with longitudinal and transverse vertical webs, but have no horizontal base plate. The lower edges of the webs take bearing on the tower cap, and are grooved to engage the guide strip provided there for the old girders. The pedestals under the fixed ends of the girders correspond to those under the expansion ends, except that they are $5\frac{1}{8}$ in. higher, to compensate for the differences in the bearing, and are recessed on top to receive the spherical disks.

Each girder weighed nearly 32 tons, and was riveted up complete in the shop and shipped on three cars, the center one acting only as an idle spacer. The girder took bearing at two points only on 12 × 12-in. transverse timbers about 10 ft. from each end, which were seated nearly in the centers of the end cars.

Worden, 105-ft. Through.

The 105-ft. through-span double track bridge of the Cleveland, Cincinnati, Chicago & St. Louis Railway across the Wabash Railroad, at Worden, Ill., has two plate girders 9 ft. $6\frac{1}{2}$ in. deep back to back of flange angles 29 ft. apart on centers, and $102\frac{1}{2}$ ft. long between pin bearings. They make a skew of about 29 to 54 with their abutments, and are connected together only by the solid floor of rectangular steel troughs without floorbeams or stringers which are field-riveted with short vertical angles to the girder webs just clear of the tops of the lower flange angles. The girders are knee-braced by solid-web gusset plates about 15 ft. apart which are field-riveted to the full length of the vertical web-stiffener angles, and for $3\frac{1}{2}$ ft. to the ends of the floor troughs.

The girder webs are $\frac{11}{16}$ in. thick at the ends, and $\frac{3}{8}$ in. thick in the middle of the span, and are made in six pieces, shop-spliced with four vertical rows of rivets in each joint. The materials are dimensioned and detailed as indicated in the elevation, and the maximum flange section consists of two 8 × 8 × $\frac{7}{8}$-in. angles, two 21 × $\frac{7}{8}$-in. web plates, and five 20 × $\frac{13}{16}$-in. cover plates. The cover plates are not spliced, but the flange angles are each spliced in two places, and the vertical flange plates in one place as indicated in the elevation diagram, all splices breaking joints in adjacent panels. The bottom flange angles extend to the ends of the girders, but the top flange

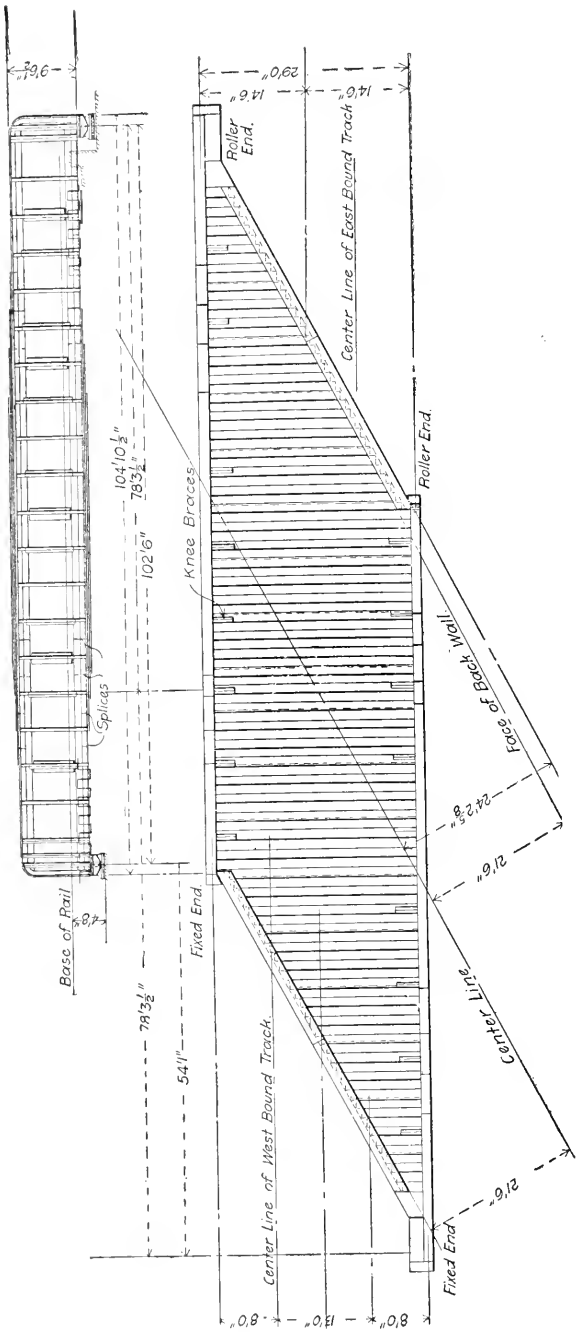

The C. C. C. & St. L. Bridge across the Wabash R.R. at Worden, Ill.

angles are cut 28 in. short at each end, and their ends abut against the horizontal upper ends of the end web-stiffener angles of the same dimensions which are curved to fit the upper corners of the girders with a 28-in. radius, thus avoiding the difficulty of bending long, unwieldy pieces.

At the ends of the girders there are four pairs of vertical web-stiffener angles close together, symmetrical with the center of the bearings which reinforce them so as to act as vertical posts proportioned for the maximum shear. Elsewhere the fillered 5 × 3½-in. vertical web-stiffener angles are located in single pairs at splices and intermediately, forming panels of 5 ft. 1½ in. All flange rivets are staggered and have a pitch of 2 in. in the cover plates, and from 2 to 4½ in. in the web. All flange rivets are 1 in. in diameter, and their holes are punched and reamed; all other rivets are ⅞ in., and their holes are punched and not reamed, except to make them match if necessary. Sole plates ¾ in. thick are riveted to the ends of the bottom flanges, and to them are field-riveted triple-web shoes with 6 $\frac{7}{15}$-in. pins bearing in corresponding pedestals. The expansion end pedestals are seated on roller nests, and the fixed end pedestals are of the same height seated directly on masonry seats at greater elevations.

Bridgeport, 105-ft. Deck.

The single-track deck span of the Pennsylvania Railroad Company, at Bridgeport, O., has plate girders about 105 ft. long and 9½ ft. deep which are somewhat unusual for that class of structure in that they have adjustable pin-connected lateral and sway-brace rods. The girder webs are composed of 115-in. plates $\frac{7}{16}$ in. thick, and are united by splice plates 11 ft. 3¾ in. apart, each riveted up with four vertical rows of shop-driven rivets. The top and bottom flanges are each composed of a pair of 6 × 6 × ¾-in. angles, with staggered joints planed at the ends and spliced with vertical cover plates. There are also continuous horizontal cover plates and a pair of vertical web reinforcement plates, all 16 in. wide, in each flange, thus giving fairly uniform T-shaped flange sections of the required area, with good connections to the web and without excessively long rivets. The girders receive the track ties directly on their top flanges, and are spaced 9 ft. apart, and connected with horizontal bracing consisting of riveted top and bottom transverse struts, and

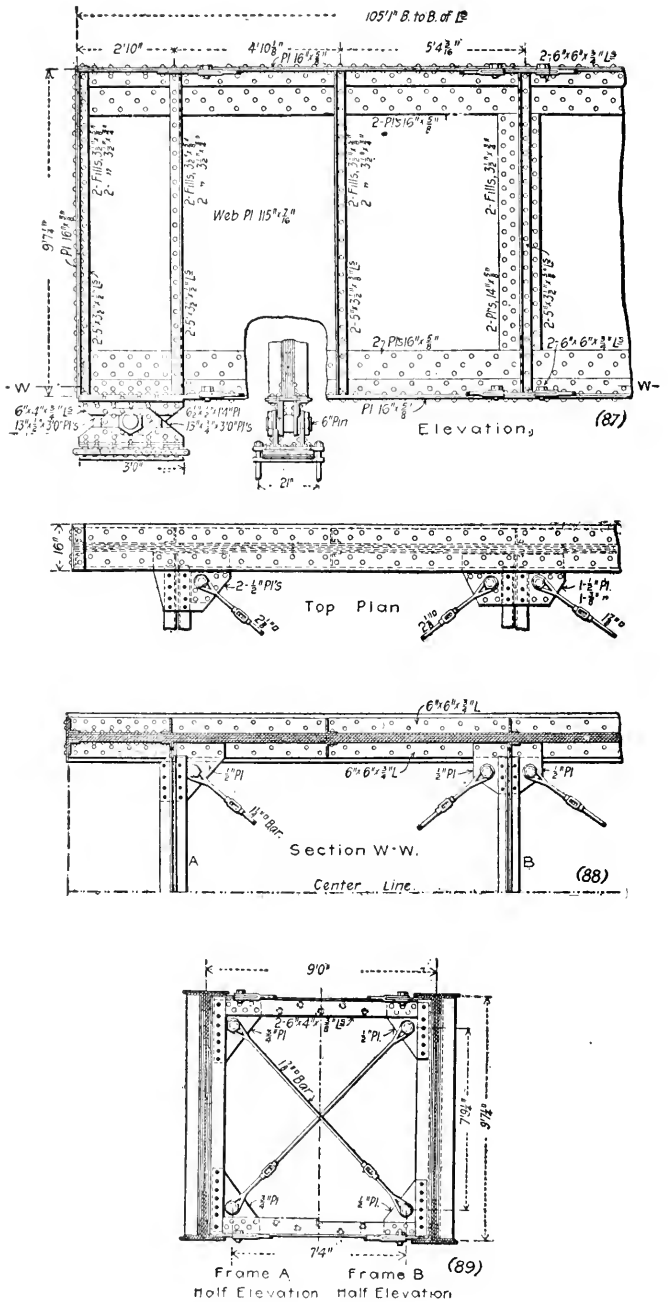

105-Ft. Span with Pin-Connected Lateral and Sway Rods. — Bridgeport Bridge.

adjustable pin-connected diagonal rods. At each panel vertical sway-bracing is provided by single adjustable transverse diagonal rods $1\frac{1}{4}$ in. square with $1\frac{7}{8}$ in. upsets and sleeve nuts and forked loop ends, which engage 3-in. pins in vertical gusset plates shop-riveted to the cross-struts and field-riveted to the vertical web stiffeners on the inside of the girders. At each end of each girder a pair of vertical webs are riveted to the under side of the bottom flange to receive a 6-in. pin that takes bearing in an ordinary riveted pedestal such as is generally used for small trussed spans. At one end this pedestal is seated on a nest of expansion rollers, as shown; at the other end the rollers are omitted, and it rests directly on the abutment masonry.

This bridge was designed in accordance with the specifications of the Pennsylvania Lines West of Pittsburgh, Edition of 1897. The loading specified is a uniform load of 5000 lbs. per lin. ft. plus a concentrated load of 50,000 lbs. in addition to the weight of the bridge which was assumed at 2100 lbs. per. lin. ft.

On a length of 102 ft. center to center of end bearings the following values were found for end shear and center moment:

102-ft. Girder.	End shear.	Center Moments.
	Pounds.	*Foot-pounds.*
Uniform live load	127,500	3,251,250
Concentrated live load	25,000	637,500
Dead load	53,550	1,365,525
Total	206,050	5,254,275

V = ratio of minimum to maximum strain = 0.26.
Unit strain for tension flange = $(1 + V)$ 7000 = 8820 lbs.
Section modulus = 5,524,275 × 12 ÷ 8820 = 7150.
Distance between centers of gravity of flanges = 111.6 in.
Required net area = 7150 ÷ 111.6 = 64.06 sq. in.

Area of Flange.	Square Inches, Gross.	Square Inches, Net.
2 — 16 × $\frac{5}{8}$-in. plates	20.00	15.00
2 — 6 × 6 × $\frac{3}{4}$-in. *Ls.*	16.88	15.38
4 — 16 × $\frac{5}{8}$-in. plates	40.00	35.00
Total	76.88	65.38

The lengths of the flange plates are determined by this formula:

$$l = L\sqrt{\frac{a}{A}}$$

where l = length of plate,
L = length of girder,
a = area of plate,
A = area of flange.

$$102\sqrt{\frac{10}{76.88}} = 36.8 \text{ ft. use } 40 \text{ ft.}$$

$$102\sqrt{\frac{20}{76.88}} = 52.0 \text{ ft. use } 55 \text{ ft.}$$

$$102\sqrt{\frac{30}{76.88}} = 63.7 \text{ ft. use } 67 \text{ ft.}$$

Unit shear on web plates = 4000 (1 + 1') = 5040 lbs.
206,050 ÷ 5040 = 40.89 sq. in. required.
Bearing per sq. in. on rivets = 1.5 × 8820 = 13,230 lbs.
Average distance between rivet lines in flanges = 99.25 in.
206,050 ÷ 99.25 = 2076 lbs. per lin. in.
Space $\frac{7}{8}$-in. rivets $2\frac{3}{8}$ in. at end of girder.

Sixteen Mile Creek, 105-ft. Through.

The Sixteen Mile Creek double-track through bridge of the Grand Trunk Railway near St. Catherine's, Canada, has plate girder spans about 10 ft. deep over all, and about 100 ft. and $105\frac{1}{2}$ ft. long over all. They were built in 1898, of medium steel, with the rivet holes punched $\frac{3}{4}$ in. and reamed to $\frac{15}{16}$ in. They were made with square corners and T-shaped flanges each having two 6 × 8-in. angles. The end bearings were simple $\frac{3}{4}$-in. flat plates riveted to the lower flanges and sliding at one end on the expansion bed plates. The web plates were in about 16 to 19-ft. lengths, and were stiffened by pairs of 6 × $4\frac{1}{2}$-in. vertical angles with fillers. The floorbeam webs were extended to make sway-brace gusset plates reaching to the top flanges of the girders and field-riveted in the ordinary way to the web-stiffener angles. In the side girders the webs had a uniform thickness of $\frac{7}{16}$ in. throughout, and the flanges have 18-in. cover plates and no side plates. The center girders differed from the side girders in that the webs are $\frac{5}{8}$ in. thick throughout, that the flanges

have side plates, that each web-stiffener angle has a wide and a narrow filler plate, and that the flange cover plates are 19 in. wide. The flange angles are spliced with short cover angles covering one joint each, and the side plates are spliced with long 10-in. splice plates covering the two staggered joints on

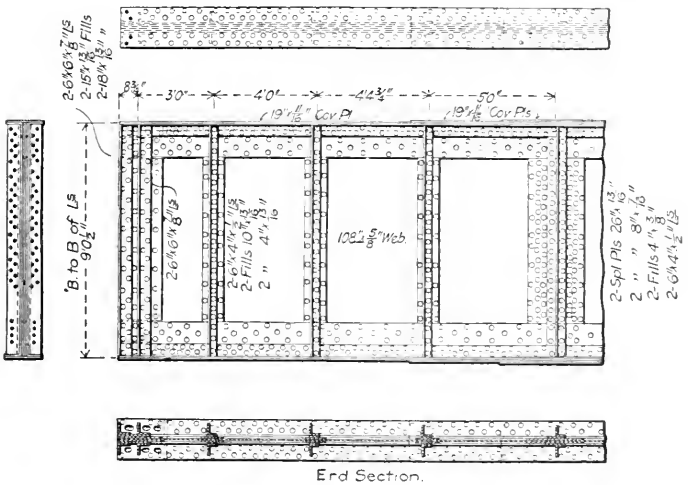

Center Girder. — Sixteen Mile Creek Bridge.

opposite sides of the web. In the 105-ft. 8-in. center girder, the flanges are each composed of two $6 \times 8 \times \frac{13}{16}$-in. angles, two $16 \times \frac{13}{16}$-in. side plates, three $19 \times \frac{3}{4}$ and three $19 \times \frac{13}{16}$-in. cover plates, and the girder weighs $64\frac{1}{2}$ tons.

Newark, 106-ft. Through.

The three tracks of the Central Railroad of New Jersey cross the tracks of the Pennsylvania Railroad at Newark, N.J., on a skew through plate-girder bridge with three spans of 95 ft., 54 ft., and $106\frac{1}{2}$ ft. Each span has four lines of girders 16 feet apart on centers which are supported on one vertical post trestle bent, one masonry pier and two masonry abutments. The abutments are in divergent planes, one of which is parallel to the trestle bent and the other parallel to the masonry pier. This makes all the girders in one end span of the same length, and all those of the other end span of another length, but makes the girders in the center span, all have different lengths,

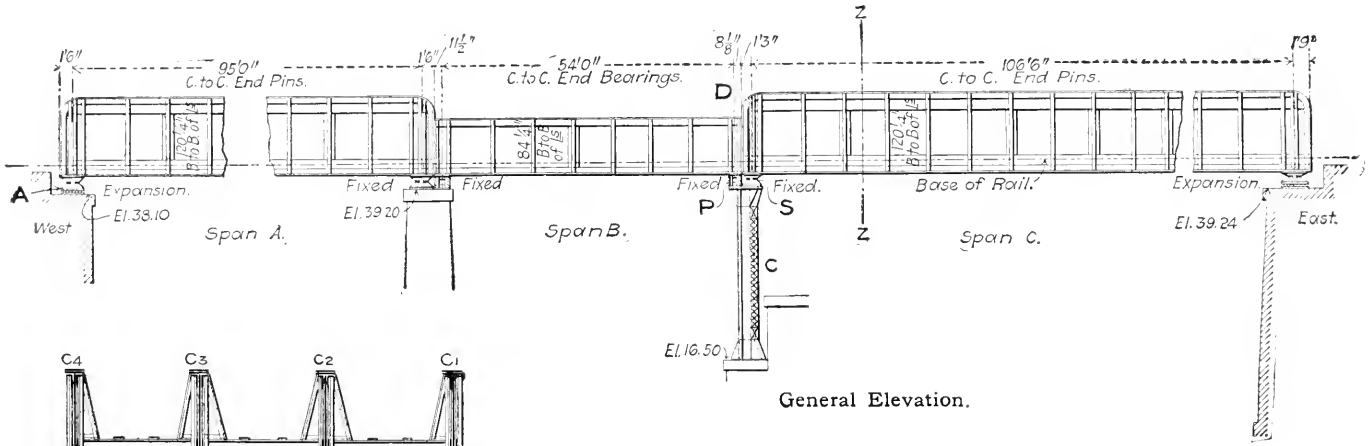

General Elevation.

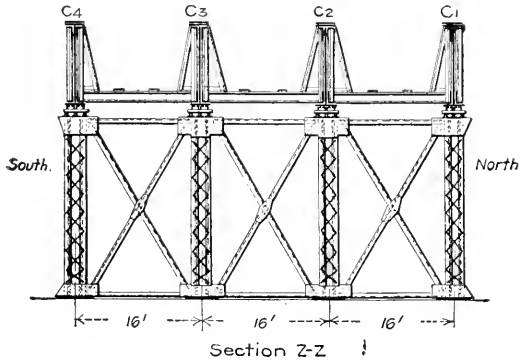

Elevation of Bent.

Newark Bridge.

namely, 50 ft., 56 ft. 9¼ in., 63 ft. 6½ in., and 70 ft. 3¾ in. center to center of pier and trestle. The pier and abutments and the south line of girders are designed for the future addition of another girder and track south of the present south girder. The long-span girders have pin bearings at both ends, and roller bearings at the abutments.

The principal structural peculiarities of the bridge are the support of the girders on the unusually wide and heavy column caps, the rigid connection of the ends of the adjacent girders one to another and the floor of I-beam joists without floorbeams, stringers, or laterals. All material is medium open hearth steel, and all rivets are ⅞ in. in diameter. The sheared edges of all bottom flange materials are planed ¼ in., and the rivet holes through bottom flange plates over ⅝ in. thick are punched and reamed ⅛ in. larger. The girders in spans *A* and *C* are similar, but have different lengths and materials, girders *C*, *B*, and *A* being proportioned for only half as much live load as the other girders in the same panels.

All girders are proportioned for a live load of two locomotives followed by a train load of 5000 lbs. per lin. ft., as indicated by the load diagram. For the heavy 106½-ft. girders this gives a maximum moment of 153,711,000 lbs. The corresponding maximum flange stress is 1,349,000 lbs., for which, at a unit stress of 10,000 lbs., the net required cross-section is 134.9 in.; this is made up of two 8 × 8 × ¾-in. angles, two 24 × ⅜-in. and two 16 × ¾-in. full-length side plates, one 27 × ¾-in. and four 27 × 1 1/16-in. cover plates from 39 to 92 ft. long, having a total gross area of 159.6 sq. in. The maximum shears are 544,850 lbs., 434,000 and 346,000 lbs., at the end, and at distances of 12 and 22 ft. respectively therefrom The web is 120 in. deep, and has thicknesses of ¾, ⅝, and ½ in. corresponding to the shears just mentioned.

Girder *C* is 106 ft. 6 in. long on centers of bearings, and 109½ ft. long over all. The web is cut to give a camber of ¾ in. in the center panel, and its splices are all made with 108 rivets in four vertical rows through two 14 × 7/16-in. splice plates. Each flange has a pair of full-length 8 × 8 × ⅞-in. angles, but those of the top flange are cut 19 in. short at each end, so as to be tangent to the curves of the rounded upper corners and abut against the upper horizontal ends of the vertical end flange angles, which are the same size and are short pieces easily curved to conform to the corners.

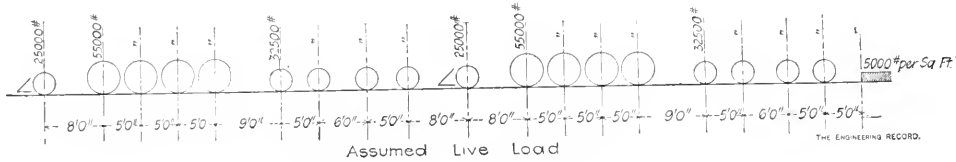

Assumed Live Load

Diagram of Locomotive Wheel Loads.

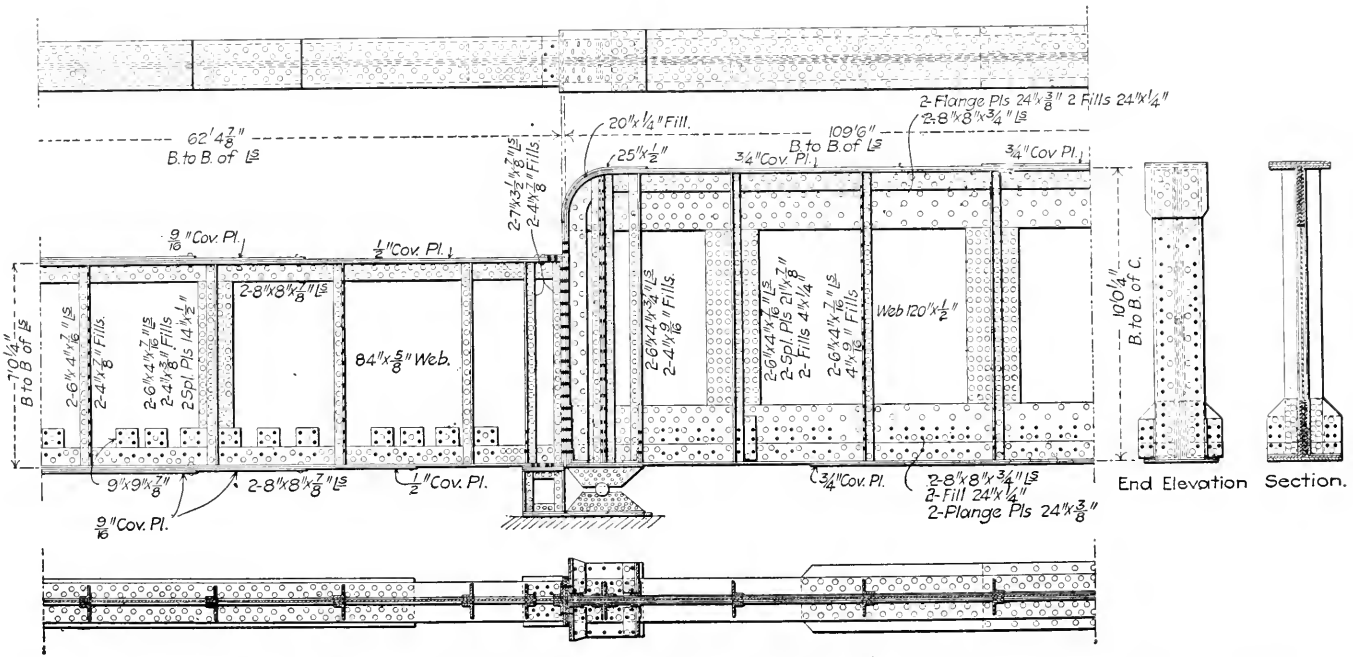

Half Elevation of Girders. — Newark Bridge.

The bottom flange angles 109½ ft. long are remarkable for their great length for such wide flanges. The flange cover plates have four rows of vertical rivets through the flange angles, and two rows of rivets through their edges outside the angles. The vertical web stiffeners are pairs of $4 \times 6 \times \frac{7}{16}$-in. angles with fillers. A $20 \times \frac{3}{4}$-in. sole plate is riveted to each end of the bottom flange to receive the triple-web riveted shoe, which is riveted to it, and engages the 6-in. pin through the corresponding pedestal. The pedestal is secured with turned bolts to the column cap. The outer reinforcement plates in the side webs of both shoe and pedestal have full holes, and form jaws locking each other together; the other webs have

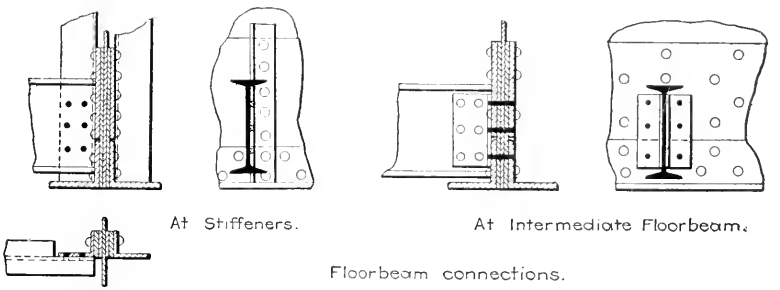

Connections of Floor I-Beams at Panel and Intermediate Points.

half holes, and their upper edges are planed for ½-in. horizontal clearance.

The heavy girders C_1, C_2, and C_3 are made as shown in the part elevation, and differ from the girder C in the thickness of the web, which varies from ½ to ¾ in. in the web splices which have four vertical rows of rivets in the center of the girder, and six rows at the ends; in the use of vertical side plates and wider cover plates for the flanges; in the extension of the sole plates and their stiffening by vertical transverse web plates; and in the general difference in thickness of materials. Each flange is made with two $24 \times \frac{3}{8}$-in. full-length vertical side plates with six horizontal rows of rivets and two full-length $8 \times 8 \times \frac{3}{4}$-in. flange angles. In the center the flange has one $27 \times \frac{3}{4}$-in. and four $27 \times \frac{11}{16}$-in. cover plates. All of the girders were riveted up complete in the shops, and shipped whole in single pieces, loaded on three cars each.

The longest of the heavy girders in the middle span is 62 ft. 4⅞ in. long over all, and is of simple construction throughout,

as shown in the elevation of one end. The web has a uniform thickness of $\frac{5}{8}$ in. and the maximum flange section consists of two $8 \times 8 \times \frac{7}{8}$-in. angles, three $20 \times \frac{9}{16}$-in. and one $20 \times 2\frac{1}{2}$-in. cover plates. The girder is made without camber, and is seated at both ends on fixed riveted pedestals, riveted to the column caps. (See page 159.) Vertical transverse filler plates, beveled to correspond with the grade, are placed between the ends of this girder and those of the end spans, and they are field-riveted together through their vertical end stiffener angles, thus making each line of girders continuous from abutment to abutment.

On all three spans the floor is substantially the same and consists of 15-in. transverse I-beams, most of them 1 ft. 4 in. apart on centers, varying from 1 ft. $6\frac{1}{2}$ in. to $11\frac{1}{2}$ in. apart on centers, at irregular spaces and panel points. The lower flanges of the I-beams clear the horizontal legs of the lower flange angles of the main girders, and are cut on one side to clear the outstanding flanges of the vertical web-stiffener angles, to which they are field-riveted by six rivets through their webs. At all other points the I-beams have a pair of 4×6-in. vertical connection angles shop-riveted to their webs at each end and field-riveted to the girder web. At alternate web stiffeners there are triangular gusset plates with single flange angles on the horizontal and inclined sides, which are riveted to the I-beams and the web stiffeners, and reach to the top flanges of the girders, forming sway braces. The floorbeam connection rivet holes were reamed to a cast-iron template. Under each line of rails there is a continuous longitudinal plate about 12 in. wide.

At the end where the skew is least, the two end floorbeams are parallel to the abutment, and the third floorbeam bisects the angle between them and the regular floorbeam. At the other end of the bridge oblique I-beams nearly parallel to the axis of the abutment, with their flanges flush with the floorbeams, are connected by bent web plates to the ends of the girders, and receive the web connections of the shore ends of the latter.

CHAPTER XI

SPANS OF 109 TO 114 FT. INCLUSIVE

Monocacy 109-ft. Deck.

THE Baltimore division of the Baltimore and Ohio Railroad crosses the big Monocacy River on bridge 38A of the Metropolitan branch. This structure is 739 ft. long, and carries a single-track on a 1 per cent. grade. It originally consisted of four Bollman truss deck spans with three masonry piers between the abutments. In the recent renewal, the superstructure was replaced by deck plate-girder spans supported on the old piers and abutments, and on three new intermediate piers at the center points of the old spans.

The new spans have sliding expansion seats at the vertical trestle bents on the new piers and at the other ends are pin-connected to fixed pedestals on new seats prepared on the old piers.

The trestle bents are composed of independent vertical and battered posts braced by horizontal and diagonal pairs of channels field-riveted across their faces. The girders are 105 and 108 ft. 9 in. long and have a uniform depth of 9 ft. over all. They were made with web plates $\frac{1}{2}$-in. thick and flanges each composed of two $8 \times 8 \times \frac{3}{4}$-in. angles, spliced in two places and reinforced with three $18 \times \frac{3}{4}$ in. cover plates 58 ft., 71 ft., and $104\frac{1}{2}$ ft.

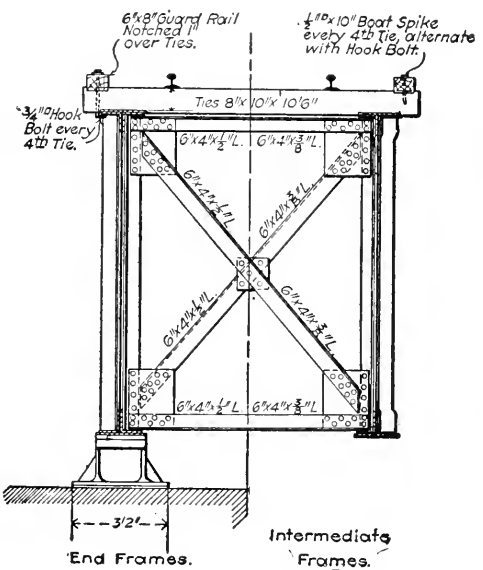

Half-Cross Sections of Single Track Structure.

long, respectively. All girders corresponded except in the lengths of the materials. They were designed for a live load of two 177½ ton locomotives, followed by a train load of 5000 lbs.

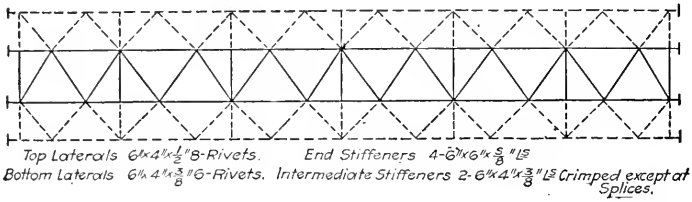
Top Laterals 6"x4"x½"B-Rivets.
End Stiffeners 4-6"x6"x⅝" Ls
Bottom Laterals 6"x4"x⅜"G-Rivets.
Intermediate Stiffeners 2-6"x4"x⅜" Ls Crimped except at Splices.

Plan of Present and Future Girders.

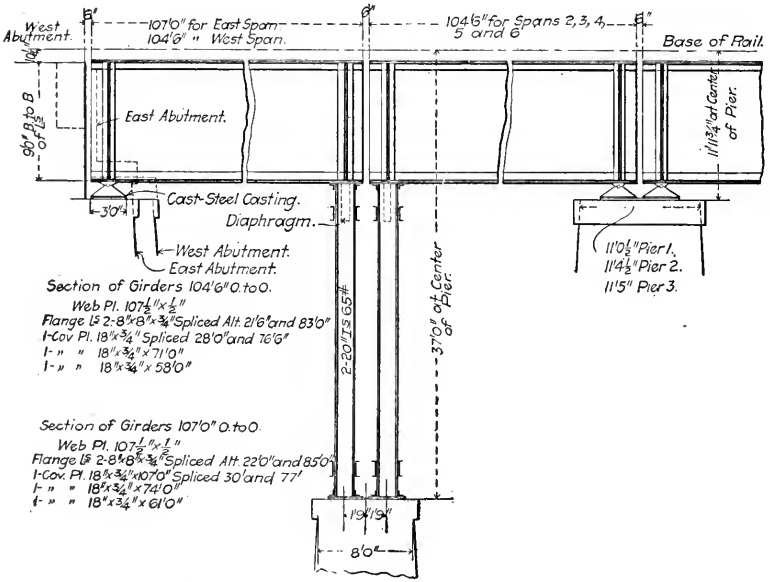

Elevation and Materials. — Monocacy Bridge.

per linear foot. They were built of open-hearth steel, and were proportioned according to the standard specifications of the Baltimore and Ohio Railroad, based on a unit stress of 16,000 lbs. per sq. in. in tension. The structural details conform to the railroad company's standards.

The bridge was designed to be, at present, a single-track structure, but is built so that it may hereafter be transformed into a double-track bridge, by the addition of two more lines of

girders outside the present ones. The girders are braced together by ordinary vertical transverse frames and by 6 × 4 in. top and bottom zigzag lateral angles. The total weight of the structure is about 1,200,000 lbs.

Clyde 111-ft. Through.

The New York Central & Hudson River Railroad Company's four-track through plate-girder bridge over the Clyde River, east of Lyons, N. Y., consists of two slightly skewed spans of three girders each, which are about 12 ft. 2 in. in extreme height and 110 ft., $8\frac{5}{16}$-in. long over all. The middle girders are designed to carry the maximum loads on each of the two adjacent tracks, and weigh 96 tons each, the total weight of both spans being about 788 tons. The girders are thus among the heaviest ever constructed, and some interesting details have been developed in their design. They are built in accordance with the New York Central Railroad Company's standard specifications for 1900, on plans drawn in the company's offices. They are proportioned for a live load of two 142-ton consolidation engines followed by a train load of 4500 lbs. per lineal foot, or 60,000 lbs. on each of two axles 7 ft. apart. The allowed unit stresses per square inch of net section in tension are 8000 lbs. for live load and 16,000 lbs. for dead load ; for compression, these are reduced, by dividing by $1 + (l^2 \div 125r^2)$; shear in webs, 5000 lbs. for live and 10,000 lbs. for dead loads ; rivet bearing, 1½ times the allowed tension strain; rivet shear, three-fourths of the allowed tension strain.

The dead load carried by the center girder was assumed to be 4030 lbs. per lin. ft. ; the maximum moments of the center girder, 14,948,000 ft. lbs. for live load and 5,216,000 for dead load; end shear of center girder, 499,000 lbs. for live load, and 209,000 lbs. for dead load.

	Floorbeams.	Stringers.
Max. moments, live loads.....	1,092,000 ft.-lbs.	280,000 ft.-lbs.
Max. moments, dead loads	140,000 ft.-lbs.	23,700 ft.-lbs.
Max. shears, live loads.....	133,000 lbs.	64,000 lbs.
Max. shears, dead loads	21,000 lbs.	4,800 lbs.

The girders are made of medium steel with the sheared edges of all plates planed. All holes in materials over ¾ in. thick, are

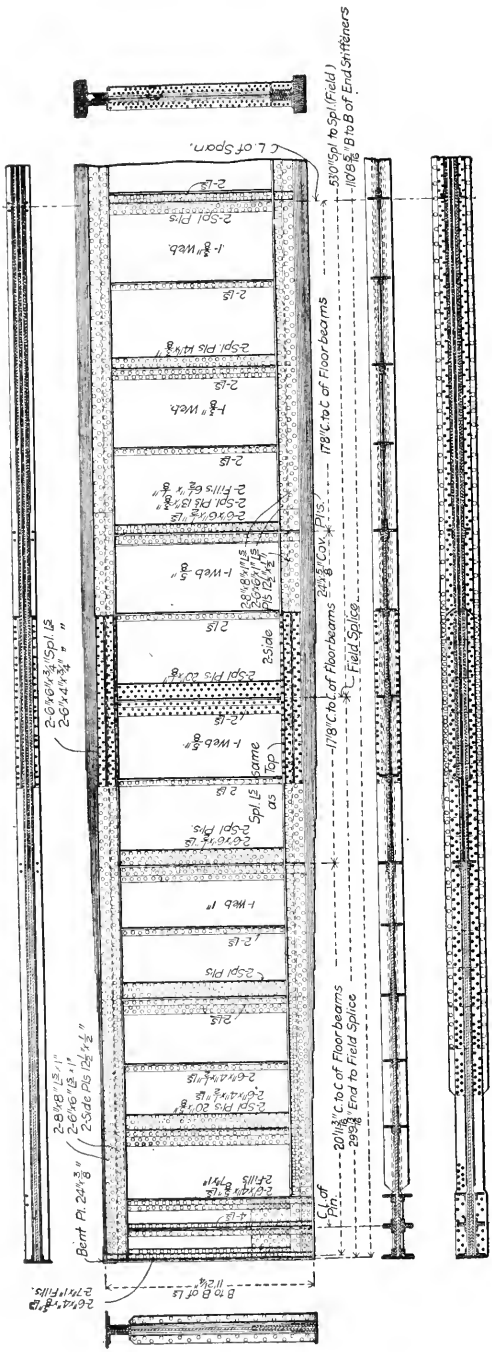

General Elevation of Center Girder. — Clyde Bridge.

drilled from the solid, all other rivet holes are punched and reamed to $\frac{1}{8}$ in. greater diameter. Flange rivets are 1 in. in diameter, all other rivets $\frac{3}{4}$ in. Rivets in floorbeam connections are reamed to iron templates. Splice plates, fillers, and web-stiffener angles have their ends fitted tight to bearing.

The bridge angle was so small that the piers were skewed only $6\frac{1}{2}$ ft. in the transverse distance of $57\frac{1}{2}$ ft. between the centers of the outer girders, and a perfectly regular arrangment of square floorbeams and duplicate panels was secured by making the ends of all main girders fixed on the middle pier, and connecting the floorbeams there at one end to the girder of one span and at the

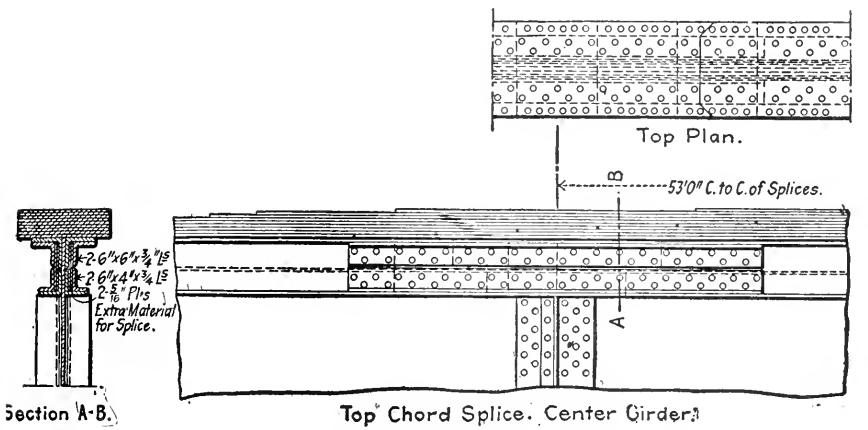

Splices and Chord Construction.

other end to the girder of the other span, as shown in the diagram of the part plan. The girders are seated on pin bearings on riveted pedestals like those for a truss bridge. At both ends of the girder the pedestals are seated on beam grillages which distribute the bridge weight over an enlarged area of the masonry. At the expansion end there is a nest of segmental rollers interposed between the pedestal and the grillage, and at the fixed end the pedestal is made long enough to receive the adjacent end of the girder of the other span. (See page 173.)

The girder web plates are uniformly 134 in. in height. In the three end panels they are 1 in. thick and about 84 in. long; in the next two panels they are $\frac{5}{8}$ in. thick, and in all the center panels they are $\frac{3}{8}$ in. thick. The web splices are each made with two cover plates which, at the end joint, are 20 in. wide, $\frac{5}{8}$ in. thick and have sixty-six rivets on each side. In the center

of the span there are two $14 \times \frac{3}{8}$-in. plates with forty-four rivets on each side, and each of the two field splices has $20 \times \frac{1}{2}$-in. plates with sixty-six rivets on each side. The depth of the girders was so great that web plates could not be made to run horizontally as usual, and therefore they run vertically and are spliced at alternate web-stiffener angles, the 1-in. plates being 84 and the $\frac{3}{8}$-in. plates 106 in. wide. In the middle of each splice and in the middle of each panel there is a pair of vertical $6 \times 4 \times \frac{1}{2}$-in. web-stiffener angles.

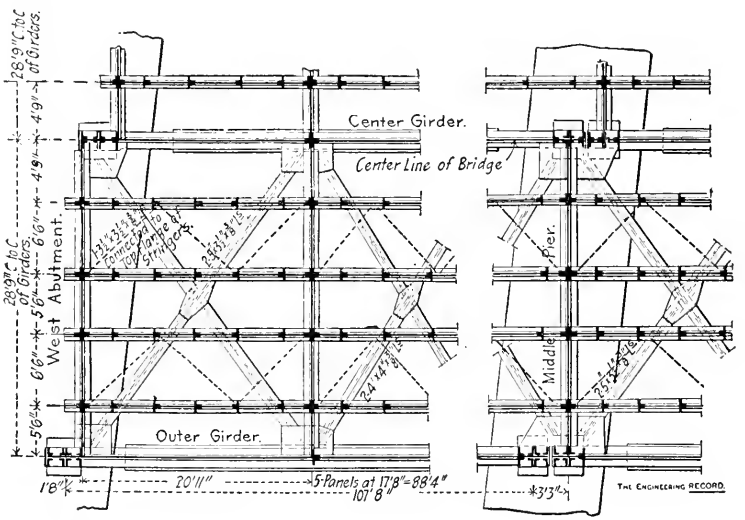

Plan of Typical Panels of Lateral Bracing. — Clyde Bridge.

At each end of the lower flange the web is reinforced by two 40×1-in. plates 1 ft. $3\frac{5}{8}$ in. long, which extend to its outer and lower edges. All of the lower flange angles are crimped over these plates, and the eight web-stiffener angles at each end have fillers bringing them flush with these plates, on which the fillers are fitted to bearing. The top and bottom flanges are each made with a maximum section of two $8 \times 8 \times 1$-in. and two $6 \times 6 \times 1$-in. angles and four $12\frac{1}{2} \times \frac{1}{2}$-in. cover plates over the vertical flanges of the chord angles. In the middle of the girder there is an additional pair of $12\frac{1}{2} \times \frac{1}{2}$-in. plates $32\frac{1}{2}$ ft. long, and another pair 62 ft. long on each flange. The outer horizontal chord flanges are reinforced by cover plates 24 in. wide, one of them $\frac{5}{8}$ in. thick and extending the full length of the girder, and seven $\frac{5}{8}$-in. plates and three $\frac{1}{2}$-in. plates of shorter lengths, down

to 47 ft. for the top plate in the middle. The girder was shipped in one 53-ft. middle section and two 29-ft. $9\frac{13}{16}$-in. sections, field-riveted together. The flange angles overlap the web splices and have staggered splices covered with two $6 \times 6 \times \frac{3}{4}$-in. and two $8 \times 8 \times \frac{3}{4}$-in. angles 9 ft. long, arranged as shown in the detail sketch, which also shows the construction of the flanges. The outer girders are lighter than the center ones, and similar to them except that their expansion rollers do not rest on beam grillages. The girders are connected together by 4-ft. floor-beams 17 ft. 8 in. apart in the center panels. The webs are $\frac{3}{8}$ in. thick, and each flange has two $6 \times 6 \times \frac{5}{8}$-in. angles, two $6 \times \frac{3}{8}$-in. vertical web plates and three 14-in. cover plates. The ends of the web are spliced to $\frac{3}{8}$-in. gusset plates about 10 ft. high, which are riveted full length to the vertical web stiffeners of the main girder, and are stiffened with a pair of angles on the bevelled edge. The stringers are 41 in. deep with $\frac{3}{8}$-in. webs and two $6 \times 6 \times \frac{3}{8}$-in. angles for the top flange, and two $6 \times 4 \times \frac{7}{16}$-in. angles for the bottom flange. They are braced together by $3\frac{1}{2} \times 3\frac{1}{2} \times \frac{3}{8}$-in. horizontal zigzag angles.

Each girder was shipped in one 53-ft. middle section and two 29-ft. $9\frac{13}{16}$-in. end sections, field-spliced together. The flange cover plates were shop-riveted together completely by a single row of widely pitched $\frac{7}{8}$-in. rivets through each edge clear of the flange angles, and all other rivets in them were field-driven so as to allow them to be shipped separate from the girder sections. In the center of the girder the vertical rivets through the flange cover plates and angles have a maximum grip of $7\frac{1}{2}$ in.

Yellow Creek, 114-ft. Through.

The Lake Erie, Alliance & Wheeling Railroad crosses Yellow Creek on a single track, through plate girder bridge of 108 ft. clear span. The girders are 17 ft. 9 in. apart, on centers, 114 ft. $4\frac{3}{4}$ in. long, and 10 ft. $4\frac{1}{4}$ in. deep, over all. They are proportioned for the heaviest locomotives, and carry at present a traffic of gondolas with a capacity of 80,000 lbs. and locomotives weighing 133,000 lbs. on drivers. The webs are $\frac{7}{15}$-in. thick throughout, and are made of plates $74\frac{1}{4}$ in. wide and 10 ft. long, except the end sections, which are $91\frac{1}{4}$ in. wide. Each flange is made with four pieces of $8 \times 8 \times \frac{7}{8}$-in. angles and $18 \times \frac{1}{2}$-in. cover plates, four thick at the center. The top-flange angles are cut

off 4 ft. 10 in. from the ends of the girders, and are spliced there to the end vertical angles of the same size, which are curved to fit the rounded upper corners of the girders with a radius of 2 ft. $5\frac{11}{16}$ in. All web splices are shop-riveted and are made throughout, as shown in the elevation of the end of the girder. All vertical web-stiffener angles have bearings on the flange angles, and all rivet holes in bottom flange angles are punched $\frac{3}{4}$-in. diameter and reamed to $\frac{15}{16}$ in. for $\frac{7}{8}$-in. rivets. Holes for field driven rivets in the floorbeam connections are reamed to iron templates.

Shoe plates $\frac{3}{4}$-in. thick are shop-riveted to the ends of the lower flanges and field-riveted to shoes having double webs and jaw plates which engage 6-in. pins through corresponding

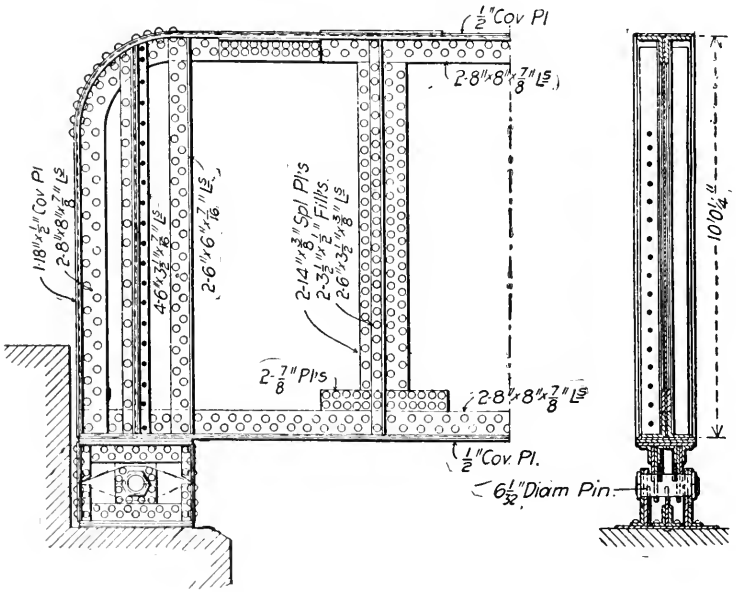

Fixed Bearing, Web and Flange Splice. — Yellow Creek Bridge.

pedestals. At the fixed ends the shoes are bolted to the masonry with split and wedged stone bolts, and at the expansion ends they are seated on nests of eight 3-in. rollers. (See page 190.) The floorbeams, 12 ft. 3 in. apart, are 34-in. plate girders with $\frac{1}{2}$-in. webs and $6\times6\times\frac{5}{8}$-in. flange angles, without reinforcement plates. The end sections, about 3 ft. long, are $7\frac{1}{4}$ ft. high and are field-riveted to the vertical web-stiffener

angles of the girders, to which they act as kneebraces, with inclined flange angles from the top flange of the floorbeam to that of the girder. There are two lines of 24-in. 85-lb. I-beam stringers 7 ft. apart, web-connected to the floorbeams with 22 rivets at each end. The stringers are braced together, just below the top flanges, by a transverse angle in the center and an inclined angle from one end of it to each adjacent floorbeam. These angles are all in a horizontal plane, and are all $3 \times 3 \times \frac{3}{8}$-in., riveted to horizontal connection plates which are shop-riveted to one flange of an angle which is field-riveted to the stringer web. Each panel between floorbeams and main girders is X-braced by single $3\frac{1}{2} \times 3\frac{1}{2}$, $3\frac{1}{2} \times 4$, and $3\frac{1}{2} \times 5$-in. angles. These are riveted to the upper and under sides alternately, of connection plates which are notched to clear the vertical web stiffeners and are field-riveted to the lower flanges of the girders and of the floorbeams. The diagonal angles are connected to the lower flanges of the stringers by bent plates which are shop-riveted to them and field-riveted to the stringers, making a kind of offset connection instead of a thick solid packing between the intersecting members. The center line of the track is on a 5-degree curve which symmetrically intersects the axis of the bridge near each end, so that the ends of the curve are about 8 in. on one side of the axis, and the center about 8 in. on the opposite side.

The girders were riveted up complete in the shop and shipped separately, loaded on three flat cars each. Each girder weighed 85,000 lbs., and was seated on two transverse timber sills about 23 ft. from the ends, and close to the trucks nearest the spacer car. Inclined braces were bolted to the ends of the sills with vertical side fish plates and were fitted at the upper ends to the under sides of the top flanges and web of the girder. The upper ends of each pair of braces were connected by a long, wide U-plate with divergent wings, which crossed over the top of the girder and was bolted strongly to each brace. To the foot of each brace was bolted a pair of diagonal bars with bend connection plates riveted to the opposite ends and bolted to the girder webs.

Janesville, 114-ft. Deck.

The Janesville & Southeastern branch of the Chicago, Milwaukee & St. Paul Railway crosses a mill race at Janesville, Wisconsin, on a single-track deck bridge of two $114\frac{1}{2}$-ft.

spans of plate girders 9½ ft. deep, and 9 ft. apart on centers, which weigh 42 tons each. The web of each girder is made in six lengths from ⅜-in. to ½-in. thickness, and is spliced with four vertical rows of rivets at each joint. The 8 × 8 × ¾-in. chord angles are made in three lengths and spliced with cover angles. There are two rows of rivets in each horizontal flange, and three rows in each vertical flange. The top chord has one full-length and three part-length 20 × ½-in. cover plates, and in the middle of it there is an 8½ × ⅞-in. bearing plate from end to end, fillered up to the top of the middle reinforcement plate, to give a level, uniform smooth bearing for the track ties.

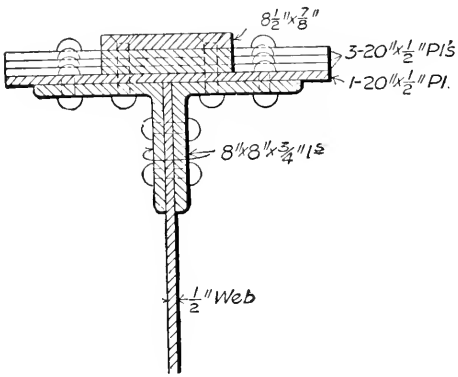

End Section of Top Chord.

The bottom chord has two 20 × ⅝-in. and two 20 × $\frac{9}{16}$-in. cover plates, only one of the former extending the full length. Each girder is divided into twelve equal panels by 6 × 6-in. vertical web-stiffener angles at the splices and intermediate between them, and at the ends there are double vertical angles. The expansion ends of the girders are seated on cast-iron shoes made in two pieces, one above the other, separated by a planed phosphor-bronze plate 8 in. square 1½ in. thick, on which the girder is free to deflect and to slide longitudinally. (See page 198.) The bronze bearing plate engages guide flanges on the upper and lower shoe, and is tap-bolted to the latter so as to key the girder to the pedestal, which is anchor-bolted to the masonry. The fixed ends of the girders are seated on ordinary cast-iron pedestals. (See page 131.) The girders of each span are staggered with each other one panel length to correspond with the skew of nearly forty-five degrees in the abutments and pier, and they are connected together by sway brace angle frames normal to the webs at panel points. The top and bottom flanges are braced by transverse struts and X-brace lateral angles.

CHAPTER XII

SPANS OF 115 FT. AND UPWARDS

Chicago Terminal Transfer, 115-ft. Through.

Two tracks of the Chicago Terminal Transfer Company cross the Illinois and Michigan Canal on a through plate girder span 114 ft. long on centers. The girders are about 115½ ft. long over all and 29 ft. apart on centers, and are skewed about 11 ft. The intermediate floorbeams, about 9½ ft. apart, are perpendicular to the girders. The floor is X-braced by single angles with horizontal connection plates field-riveted to the lower flanges of the floorbeams and to the projecting edges of the cover plates in the lower flanges of the main girders, one panel of X-bracing extending through three beam panels. Each

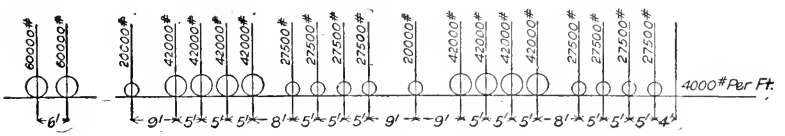

Locomotive Loading.

rail is carried by two lines of 18-in. 55-lb. I-beam stringers, and the girders have bearings on pins of large diameter, which engage their webs.

The bridge is proportioned for a dead load of 2200 lbs. per lin. ft. for each girder, and for a live load consisting of two locomotives weighing 310,000 lbs. each, on a 51½-ft. wheel base, followed by a train load of 4000 lbs. per lin. ft. on each track. The maximum stresses produced by this loading are 12,335,100 ft.-lbs. moment, 475,500 lbs. shear, in the girders; 850,000 ft.-lbs. moment, 106,200 lbs. shear, in the floor beams; and 95,450 ft.-lbs moment, 45,500-lbs. shear, in the stringers.

The main girders are somewhat peculiar in that the 119¼-in. webs ⅜ in. thick in the center panels, are made with two plates spliced with double 1-in. cover plates on the neutral axis of the girder. In the remaining panels the web is made with single full depth plates increasing to a thickness of ⅝ in. at the ends,

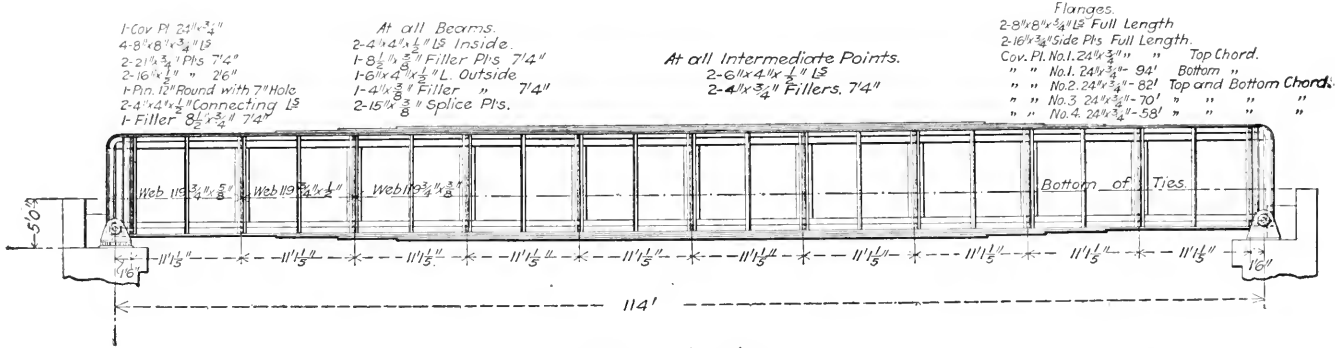
1-Cov. Pl. 24"x3/4"
4-8"x8"x3/4" Ls
2-21"x3/4" Pls 7'4"
2-16"x1/2" " 26"
1-Pin. 12" Round with 7" Hole
2-4"x4"x1/2" Connecting Ls
1-Filler 8 1/2"x3/4" 7'4"
At all Beams.
2-4"x4"x1/2" Ls Inside.
1-8 1/2"x3/4" Filler Pls 7'4"
1-6"x4"x1/2" L. Outside
1-4"x 3/4" Filler " 7'4"
2-15"x 3/4" Splice Pls.
At all Intermediate Points.
2-6"x4"x1/2" Ls
2-4"x3/4" Fillers. 7'4"
Flanges.
2-8"x8"x5/8" Ls Full Length
2-16"x3/4" Side Pls Full Length.
Cov. Pl. No.1. 24"x3/4" " " Top Chord.
" " No.1. 24"x3/4" - 94' Bottom "
" " No.2. 24"x3/4" - 82' Top and Bottom Chords.
" " No.3. 24"x3/4" - 70' " " " "
" " No.4. 24"x3/4" - 58' " " " "
Web 119 3/4"x5/8"
Web 119 3/4"x1/2"
Web 119 3/4"x3/8"
Bottom of Ties.
50"
16"
11'1 1/2"
114'

Outside Elevation.

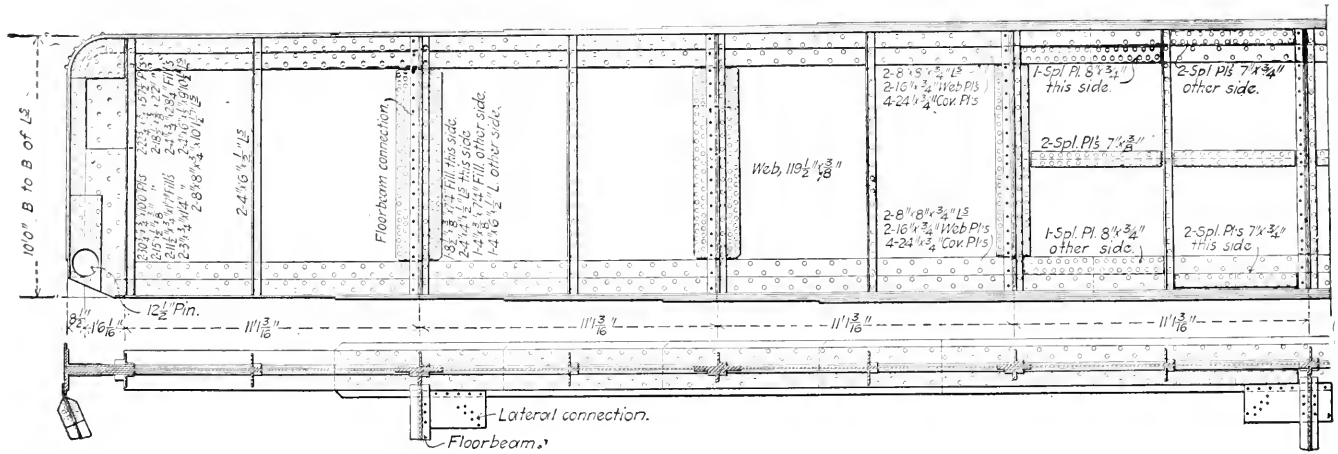

Partial Inside Elevation of Girder and Sectional Plan showing Bottom Flange.

Chicago Terminal Transfer Bridge.

where they are reinforced by double cover plates on each side in the short end panels. The upper corners are rounded to a 12-in. radius, and the lower corners are bevelled slightly, and have the bottom flanges cut off to clear the riveted pedestals.

The top and bottom flanges are alike, except that the first cover plate in the top flange reaches from end to end of the girder, and in the bottom flange it is only 94 ft. long. Each flange has in addition three other 24¾-in. cover plates, two 16 × ¾-in. full-length side plates, and two 8 × 8 × ¾-in. angles. The side plates are spliced with 8 × ¾-in. plates, and the flange

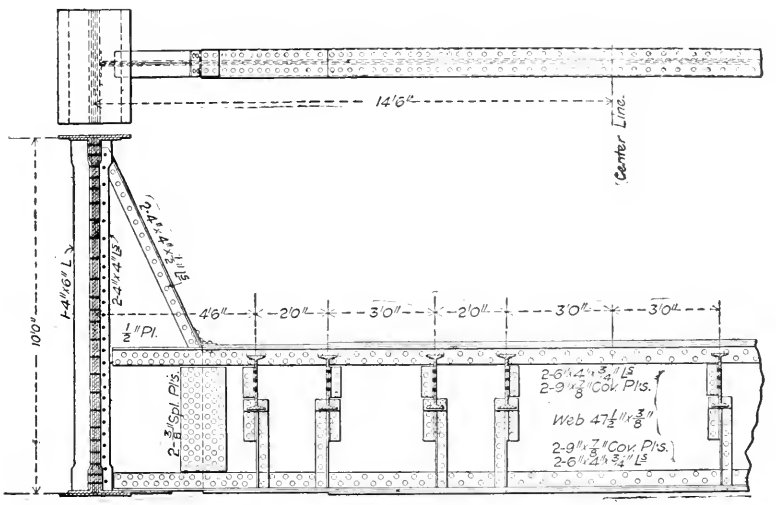

Half Cross-Section.

Floor System and Knee Bracing.

angles are spliced with pairs of 7 × ¾-in. plates, one on each flange, all flange splices breaking joints. The web is spliced at alternate panel points with double cover plates having six vertical rows of shop-driven rivets. The floorbeam webs are made with short end sections extending above the top flanges to form gusset and connection plates, and have their inclined edges stiffened with flange angles, to serve as kneebraces. They are connected to the webs of the main girders by pairs of vertical angles field-riveted through both flanges.

The track stringers are seated on horizontal shelf angles reinforced by the upper ends of the web stiffeners, and are web-connected to the floorbeams with short vertical angles. They

are supported at the abutments on cast-iron pedestals 8 in. high. Each end pin is a hollow steel casting which engages the half holes in the webs of the pedestal. At the fixed end the pedestals are seated directly on the abutment masonry, and at the expansion end they are seated on rollers with cast bed plates. (See page 139.)

The girders were riveted up complete in the shops, and weigh about 125,095 lbs. each as shipped, loaded on three steel cars of a capacity of 100,000 lbs. each. The middle car was a spacer and the bearings were near the centers of the end cars, where the girder was set to swivel on supports inside steel yokes.

The bridge conforms to the specifications of the Chicago Terminal Railway Company.

Maiden Lane, 116-ft. Through.

The New York Central & Hudson River Railroad's Maiden Lane bridge, across the Hudson River, Albany Basin and adjacent streets at Albany, N. Y., includes one of the longest and heaviest plate girder spans ever built. It is used for passenger traffic only, and was specially designed for heavy loads and high speeds. It was necessary to permit the location of the curved tracks anywhere on the floor surface, and to provide as well as possible for the safety of train and bridge in case of a derailment. These, among other considerations, prevailed for the adoption of a through plate girder span with solid gusset plate kneebraces, and a standard steel trough ballasted floor, on which the track can be shifted and adjusted at will as if on the solid ground. The girders are set on parallel masonry abutments which are skewed to the direction of the tangent 39 ft. in 29 ft. The superstructure is symmetrical in plan about the center lines, except that the opposite sides or ends are respectively acute and oblique, or right- and left-handed. The part plan and elevation and the enlarged semi-elevation and cross-section, are each symmetrical about the common center line.

The girders are 29 ft. apart, center to center, and are 10 ft. high from back to back of chord angles. They are 116.5 ft. long over all, and are 113.5 ft. between centers of their supports, which are pin bearings and pedestals, like a truss span.

Each girder weighs about 85 tons, is built of open-hearth steel throughout, with $\frac{1}{2}$-in. camber, and is designed for maximum moments of 7,340,000 ft.-lbs., and 6,520,000 ft.-lbs. from live and dead loads respectively and for end shears of 271,000 lbs., and 236,000 lbs. live and dead. All rivet holes were punched small and reamed to size; all rivets, except in floor troughs are $\frac{7}{8}$-in. in diameter, and those driven in the field were driven with pneumatic machines.

The web plates are 10 ft. high, and are in lengths of from $14\frac{1}{2}$ ft. at the ends to 30 ft. at the center, with corresponding thicknesses of $\frac{11}{16}$, $\frac{9}{16}$, and $\frac{7}{16}$ in. The web is stiffened at intervals of 6 ft. with pairs of $6 \times 4 \times \frac{1}{2}$-in. vertical angles and

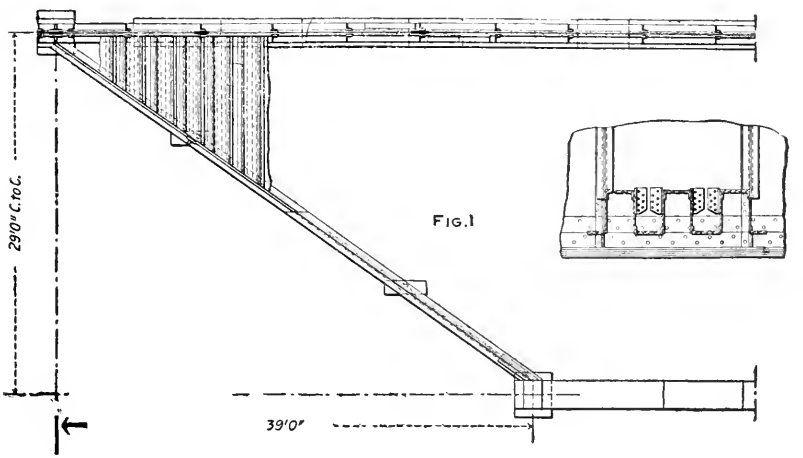

Diagram at Skew End. — Maiden Lane Bridge.

filler plates 4 in. wide. Each web splice is made with two $6 \times 4 \times \frac{1}{2}$-in. vertical angles, two $13\frac{1}{2}$-in. plates, and two $7 \times \frac{1}{16}$-in. fillers.

The web plates are spliced with four rows of rivets at 4 in. pitch. In each flange splice the joints of the angles are staggered and covered with a single 27×1-in. top cover plate having 44 rivets on each side, and two $3 \times 3 \times 1$-in. cover angles with 20 rivets each side. The ends of the girders are finished with two $8 \times 8 \times \frac{1}{2}$-in. vertical angles and a $27 \times \frac{3}{8}$-in. plate, bent tangent to the top flange with a radius of 18 in.

The 8-in. pins on which the girder takes bearing engage upper and lower shoes like those of a long span truss. (See pages 175–193.)

The top and bottom flanges are alike and each has two 8 × 8 × 1-in. angles in three lengths, spliced to extend from end to end of the girder. Each flange has two 16 × $\frac{5}{8}$-in. vertical web plates 60 ft. long, in the center, and corresponding filler plates $\frac{11}{16}$ and $\frac{13}{16}$ in. thick under the angles from their extremities to the ends of the girders. There are four 27-in. cover plates on each flange. The outer one is $\frac{13}{16}$ in. thick and 56 ft. 2 in. long, and the others are all 1 in. thick and 73 ft. 2 in., 87 ft. 6 in., and 101 ft. 2 in. in length successively, and are placed a foot or two nearer the obtuse than the acute end of the girder. Special provision is made for stiffening the wide horizontal plates of the top flange, which overhang the flange angles several inches on each side. On each side of the top of the outstanding flange of each web-stiffener angle there is riveted a short transverse angle with the horizontal flange up, and bearing

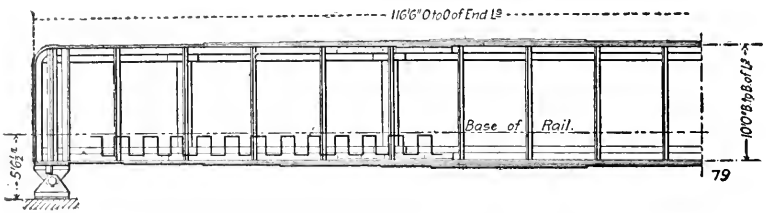

Inside Semi-Elevation. — Maiden Lane Bridge.

against the under side of the flange plate, with filler plates under the projection of the flange plates beyond the flange angles. On the outside, these bearing angles are riveted also to a short vertical web gusset plate, and on the inside to the top of the long gusset plate which is riveted to the whole length of the web stiffener and to the upper flange of the floor trough top angle, and forms a kneebrace, with solid web and a pair of inclined angles. There are four lines of web rivets in each flange, all of them staggered and pitched from $2\frac{1}{2}$ in. alternate, at the ends, to 6 in. in the middle of the girder. Two rows are through the vertical flanges of the flange angles and the other two are below them through the web plates only. The horizontal flange cover plates each have six rows, two through each flange angle and one through the plates alone outside of each angle.

Horizontal brackets 8 ft. in extreme length are composed of pairs of 3 × $2\frac{1}{2}$ × $\frac{3}{8}$-in. angles and $\frac{3}{8}$-in. plates, and are riveted

outside of one girder to the outstanding flange at the bottom of each vertical web-stiffener angle to carry the 6-ft. sidewalk, and its railing, which is composed of a lattice work of $1\frac{3}{4} \times \frac{3}{8}$-in. bars, 8-in. mesh.

The floor is made of troughs $13\frac{1}{2}$ in. wide and 21 in. deep, with $\frac{1}{2}$-in. top and bottom and $\frac{3}{8}$-in. side plates and $4 \times 3 \times \frac{7}{16}$-in. angles arranged as shown in the detail drawing. Each end of each trough is connected to the girder web by two vertical $6 \times 6 \times \frac{1}{2}$-in. angles and fourteen $\frac{3}{4}$-in. web rivets. Over the piers, one end of each trough is closed and connected by bent plates to the web of an oblique transverse plate girder which joins the ends of the main girders, and is intermediately supported on two riveted pedestals of an I-shaped cross-section.

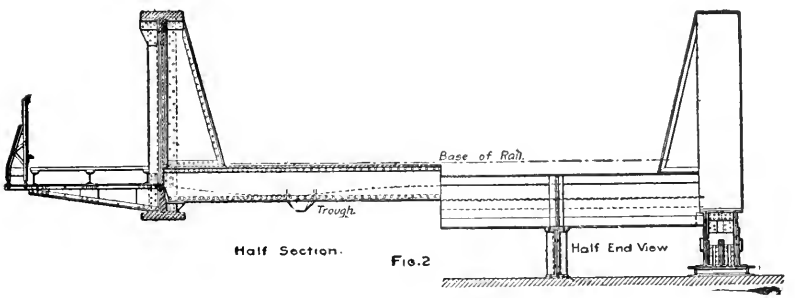

FIG. 2

Part Elevation, Plan and Sections.

This end girder has a $\frac{3}{8} \times 33$-in. web and four $6 \times 6\frac{1}{2}$-in. flange angles and a shelf angle of the same size, riveted to the inside of the web at about the middle of its height, on which the bevelled ends of the floor troughs rest.

The troughs are partly filled with a binder crowned at the middle and on both sides of the bridge, so as to make two drainage gutters through which the water flows to $1\frac{1}{2}$-in. nipples screwed through the bottoms of the trough plates at intervals. These discharge into galvanized iron troughs, which pitch from the center towards both ends of the span and waste to the street sewer through 4-in. wrought-iron leaders at the abutments. Ballast is filled in on top of the binder to a level of one inch above the tops of the troughs and the ties are bedded in it. The girders were shipped from the bridge shop in sections, and the splices field-riveted. All the steel work was painted one coat of pure red lead and raw linseed oil, and two coats of New York Central asphaltum varnish.

The design was made conformable to its standard specifications by the Engineer Department of the railroad.

West Shore Bridge No. 454, 116-ft. Through.

Bridge 454 of the West Shore Division of the New York Central & Hudson River Railroad is a through structure of

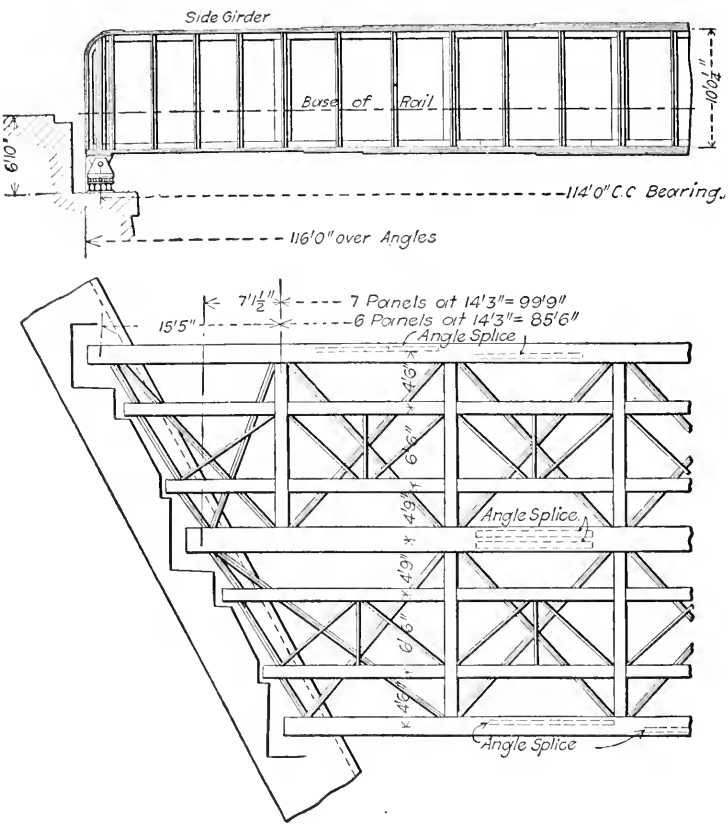

Lateral Bracing and Arrangement of Splices. — West Shore Bridge 454.

about 108 ft. clear span which carries two tracks over the Erie Canal at a point about 24 miles west of Jordan. It has two plate girders 10 ft. deep from back to back of flange angles, 15 ft. 4 in. apart on centers, and 116 ft. long over all with pin bearings 114 ft. apart. The center girder weighs 77½ tons, and all were riveted up complete at the shops and shipped

on four cars each. They are built of medium steel designed in accordance with the railroad company's specifications, and proportioned for a live load of two 142-ton locomotives followed by

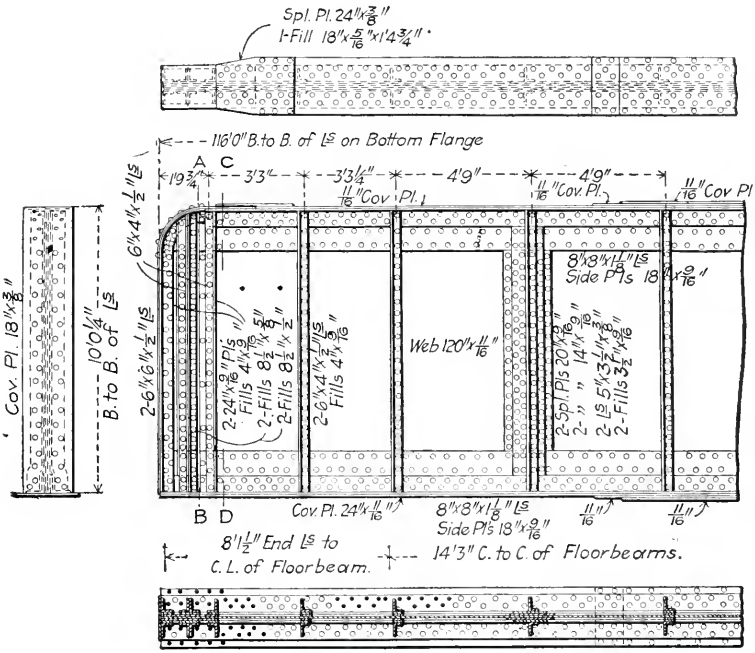

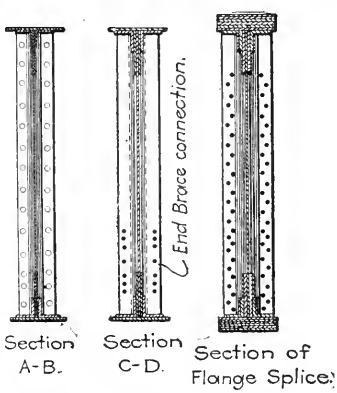

Details of Girder.

a train load of 4500 lbs. per lin. ft. on each track, and for a dead load composed of 800 lbs. of track, and 400 lbs. of steel per lin. ft. of bridge. The wind load, per linear foot, is assumed at 430 lbs. static and 630 lbs. moving. The corresponding maximum stresses are in the side girders, foot-pound dead load bending moment, 2,189,500 ft.-lb.; live load bending moment, 4,131,400 ft.-lb.; live plus $\frac{1}{2}$ dead, for impact excess, 5,226,200 : end shear, dead, 73,900 ; live, 142,300 ; live plus $\frac{1}{2}$ dead, 179,300 lbs. For the center girder moments, dead, 3,820,000 ; live, 8,157,800 ; live plus $\frac{1}{2}$ dead, 10,067,000 ; shear, dead, 121,200 ; live 272,600 ; live plus $\frac{1}{2}$ dead, 333,200 lbs.

The girders have rounded upper corners and have camber built in at the shops. In all of them the $8 \times 8 \times 1\frac{1}{8}$-in. flange angles are each made in three sections with their joints staggered on each side of the web at the same end of the girder, and spliced with a pair of $6\frac{7}{8} \times 6\frac{7}{8} \times \frac{7}{8}$-in. cover angles about $10\frac{1}{2}$ ft. long, which take both joints and have their centers about 29 ft. from the ends of the girders. The web plate is spliced at points about 14 ft. apart, except at the ends where they are closer, and are stiffened by pairs of $5 \times 3\frac{1}{2}$-in. vertical angles with fillers, except at web splices, and over the end bearings where they are $6 \times 4 \times \frac{1}{2}$-in. angles. The ends of the top-flange angles are cut off square about 2 ft. from the ends of the girders and the pairs of $6 \times 6 \times \frac{1}{2}$-in. end vertical web-stiffener angles are curved at the top to be tangent to them, and practically continue them to the bottom flange. Both flanges are made alike and the cover plates are made very long so that only the full length ones require splicing, and these are spliced by the ends of the second plates projecting over their joints beyond the lengths required for by the stress diagram. The flanges and their splices were designed to secure the minimum grip to the vertical rivets, and to have as large a proportion as possible of their cross-sections comprised in the angles which are about the heaviest size procurable. The flanges of the side girders each have one $18 \times \frac{5}{8}$-in. cover plate full length, one $18 \times \frac{5}{8}$-in. 79 ft.; one $18 \times \frac{5}{8}$ in. 63 ft.; and one 18×12-in. plate 40 ft. long, and have a total net section of 67 sq. in., allowance being made for two staggered rows of $\frac{5}{8}$ in. rivets in each flange of each angle. The web is $\frac{7}{16}$-in. thick throughout. The center girder flanges each have two full length $18 + \frac{11}{16}$-in. side plates spliced, one full length $24 \times \frac{11}{16}$-in. cover plate spliced; one $24 \times \frac{11}{16}$-in. 85 ft.; one $24 \times \frac{11}{16} \times 77$ ft.; one $24 \times \frac{5}{8}$-in. $\times$ 68 ft.; one $24 \times \frac{11}{16}$-in. $\times$ 58 ft.; and one $24 \times \frac{9}{16}$-in. $\times$ plate 48 ft. long, making a total net section of 127.1 sq. in. allowing for ten staggered rows of 1-in. rivets. The girders have riveted steel shoes riveted to the ends of their lower flanges and engaging 6-in. pins through riveted pedestals. (See page 190.) The pedestals are seated on grillages of 10-in. I-beams with $\frac{1}{4}$-in. lead sheets betweem them and the masonry. At the expansion end the abutment seats are lower so as to allow the interposition of nests of 4-in. rollers. The grillage beams are riveted to top and bottom plates 1-in. thick, and are proportioned to reduce the masonry load to 1666 lbs. per sq. in.

The girders are connected by floorbeams 14 ft. 3 in. apart and 37 in. deep. Their lower flanges are $1\frac{1}{2}$ in. above those of the girders and their end sections of web project above the top flanges about 6 feet, forming gusset plates riveted to the vertical web-stiffener angles and having flange angles on the inclined edges to make them efficient sway braces. The floorbeams are regular and at right angles to the skew girders, and the end panels are provided with end stringers which rest on the masonry, thus avoiding skew end floorbeams. The lateral system is made with triple intersection X-braces, each consisting of a pair of angles with a $3\frac{1}{2} \times \frac{3}{8}$-in. plate added at the ends. Rivet holes were drilled from the solid in pieces $\frac{3}{4}$ in. thick and more; in thinner pieces they were punched and reamed $\frac{3}{16}$ in. Holes for floorbeam connections were reamed to iron templates. Shop rivet holes were reamed to $\frac{15}{16}$ in. and $1\frac{1}{16}$ in. diameter. The edges of all sheared plates over $\frac{1}{2}$ in. thick were planed.

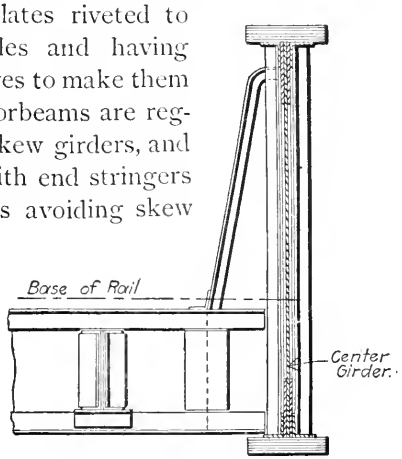

Floorbeam Connection.

Erie Bridge No. 7, 128-ft. Through.

Bridge No. 7 of the Bradford division of the Erie Railroad is a single-track one-span through plate girder structure with a skew of 9 ft. $5\frac{1}{2}$ in. in a width of 16 ft. 9 in. center to center of the $9\frac{1}{2}$-ft. girders, 128 ft. long over all, 125 ft. $2\frac{1}{2}$ in. long on centers of bearing pins, which have a clear span of 120 ft. between abutments below copings. The floorbeams $14\frac{1}{2}$ ft. apart are web-connected to two lines of stringers and the panels between them are X-braced with single 6×4-in. angles, vertical flanges down, the ends of which are field-riveted to connection plates engaging the lower flanges of the floorbeams and girders. At each intersection one of the diagonal angles is continuous, and the other is cut to clear it and spliced across it by a horizontal plate riveted to both members. Horizontal connection angles are riveted to the lower flanges of the stringers and have their vertical legs riveted to the vertical legs of the diagonal angles.

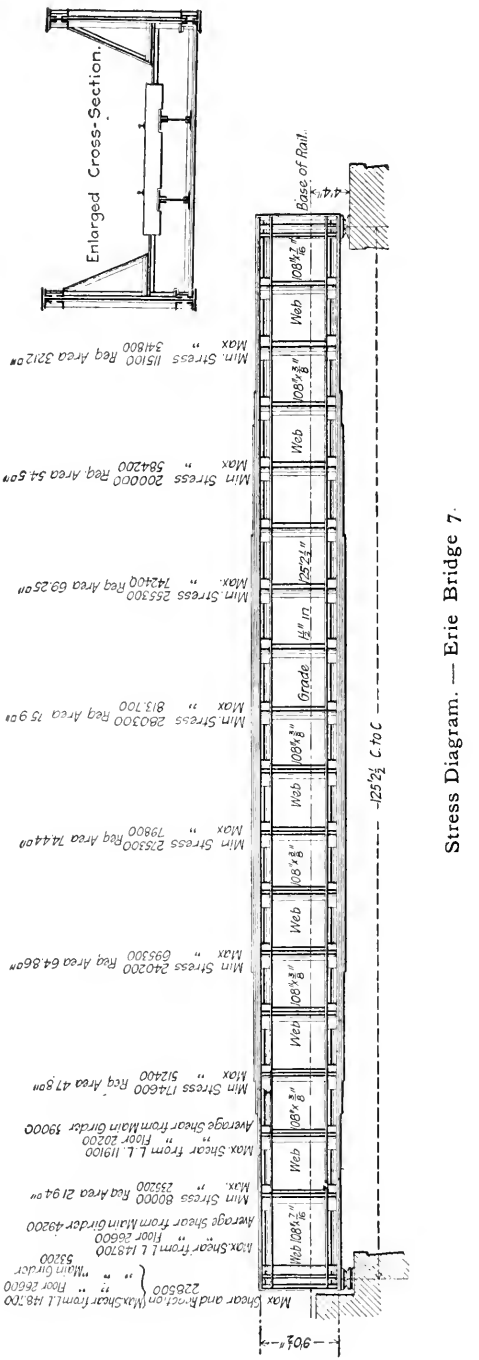
Enlarged Cross-Section.
Base of Rail.
4.4″
90½″
125½″ c. to c.
Max. Shear and Reaction 226500 (Max. Shear from L.L. 148700 " " " Floor 66600 " " " Main Girder 53200
Max. Shear from L.L. 148700 " " Floor 66600
Average Shear from Main Girder 49200
Min. Stress 80000 Req Area 21.94□″
Max. " 293200
Max. Shear from L.L. 119100 " " Floor 20200
Average Shear from Main Girder 39000
Min Stress 174600 Req Area 47.80□″
Max " 512400
Min Stress 240200 Req Area 64.86□″
Max " 695300
Min Stress 215300 Req Area 74.44□″
Max " 798.00
Min. Stress 280300 Req Area 75.9□″
Max " 813700
Min. Stress 255300 Req Area 69.25□″
Max. " 742400
Min Stress 200000 Req Area 54.5□″
Max " 584200
Min. Stress 115100 Req Area 32.12□″
Max " 341800
Web
Grade
Web
Web
Web

The main girders are of ordinary design except that they have H-shape flanges each made with two pairs of $6 \times 8 \times \frac{5}{8}$-in. angles, reversed. Each angle is in two pieces spliced near the center with a $6 \times 8 \times \frac{3}{4}$-in. angle with its root planed to fit the fillet. Each flange is reinforced with four horizontal cover plates with lengths of 128 ft. 9 in., 86 ft., 78 ft., and 52 ft. The plates are in sections arranged so that the outer ones splice the inner ones except at the center where there is a $\frac{9}{16}$-in. cover plate about 11 ft. long over all the flange plates. All the top flange plates are $18 \times \frac{9}{16}$-in. and all the bottom flange plates are $20 \times \frac{9}{16}$-in. except the longest one which is $20 \times \frac{3}{8}$-in. There are four rows of $\frac{7}{8}$-in. rivets in the cover plates and two rows in the vertical flanges of the angles.

The web plates are 9 ft. deep throughout and $\frac{3}{8}$-in. thick except in three panels from each end where they are $\frac{7}{16}$-in. thick. Except at the ends the plates are alternately $88\frac{3}{4}$ in. long and $84\frac{1}{4}$ in. long, and are spliced at each joint by two $13\frac{1}{2} \times \frac{5}{8}$-in. plates 6 ft. $10\frac{1}{2}$ in. long with four vertical rows of rivets. The web is stiffened by a pair of $6 \times 3\frac{1}{2}$-in. angles at each splice and intermediate between each splice. The maximum chord sections are 79.26 sq. in. gross for the top, and 85 sq. in. gross and 76.62 sq. in. net, for the bottom chord. These amounts include $\frac{1}{8}$ the cross-section of the web, *i.e.*, 5 sq. in. in each case. To develop the efficiency of this portion of the web it is spliced across the flange angles at all joints by two $11 \times \frac{7}{16}$-in. plates 4 ft. long. The top flanges are cambered $\frac{1}{32}$ in. in each panel between web-stiffener angles.

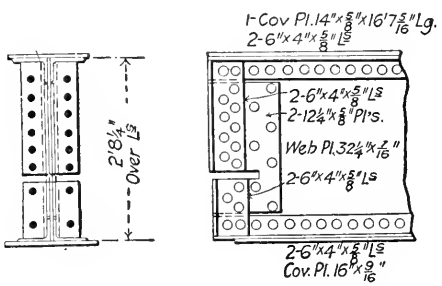

Floorbeam Slotted to Clear Flange Angle.

The floorbeams are web connected to the girders at alternate web splices, and have gusset plates reaching to the top flanges of the girders. The ends of the floorbeam webs are reinforced and are slotted to clear the horizontal flanges of the upper angles in the lower flanges of the girders. Cast-steel shoes are riveted to the lower flanges of the girders, and have 3-in. pin bearings on cast-steel pedestals seated at the fixed ends on the abutment masonry and at the expansion ends on roller nests.

(See page 161.) Each girder weighed 49 tons and was lifted from low skids in the bridge shop yards by trolley hoists on three transverse gallows frames spanning the main track. It was hoisted up, traversed over three cars, and lowered to place on them, complete for shipping.

Pine Creek, 128-ft. Deck.

The Pine Creek double-track skew deck bridge, one mile west of the Jersey Shore Junction in the Beech Creek district of the Pennsylvania Division of the New York Central & Hudson River Railroad, has three duplicate 127-ft. 10-in. main spans and one 33-ft. 8-in. approach span. Each track is carried on a pair of independent plate girders which form a separate span, and are

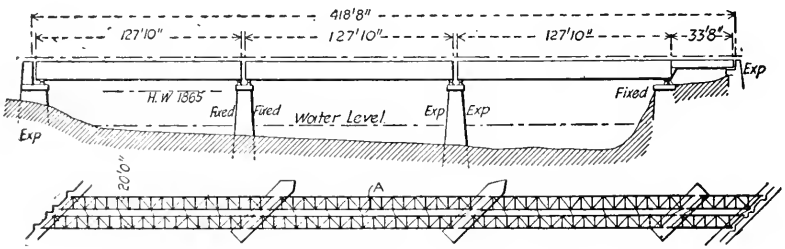

General Plan and Elevation. — Pine Creek Bridge.

proportioned for two 142-ton locomotives followed by a train load of 4500 lbs. per lin. ft., or for two 60,000-lb. axle loads and the same train load; for a track load of 400 lbs. per lin. ft. of bridge, for a steel load of 1800 lbs. per lin. ft. of the long spans and 700 lbs. for the short span, and for a top lateral wind pressure of 200 lbs. static and 300 lbs. moving and a bottom lateral pressure of 150 lbs. per lin. ft. The maximum computed stresses in the main spans were: Bending moment, dead load, 2,170,000 ft.-lbs.; live load, 5,024,000 ft.-lbs., and live plus $\frac{1}{2}$ dead, 6,109,000 ft.-lbs.; shear, dead load, 70,400 lbs.; live load, 181,500 lbs., live plus $\frac{1}{2}$ dead, 216,700 lbs.

Each flange in a long girder has two full length 8 × 8 × $1\frac{1}{8}$-in. angles and one 20 × $\frac{5}{8}$-in. cover plate, one 94, one 82, and one 68-ft. 20 × $\frac{5}{8}$-in., and one 44 ft. 20 × $\frac{1}{2}$-in. cover plate, all aggregating 83 sq. in. in net cross-sectional area, and requiring rivets with a maximum grip of $4\frac{1}{8}$ in. The angles and the first

and second cover plates are spliced, and the ends of the outer cover plates are extended to splice the inner ones. (See page 225.) The web plates are $\frac{1}{2}$ in. thick throughout, are cambered

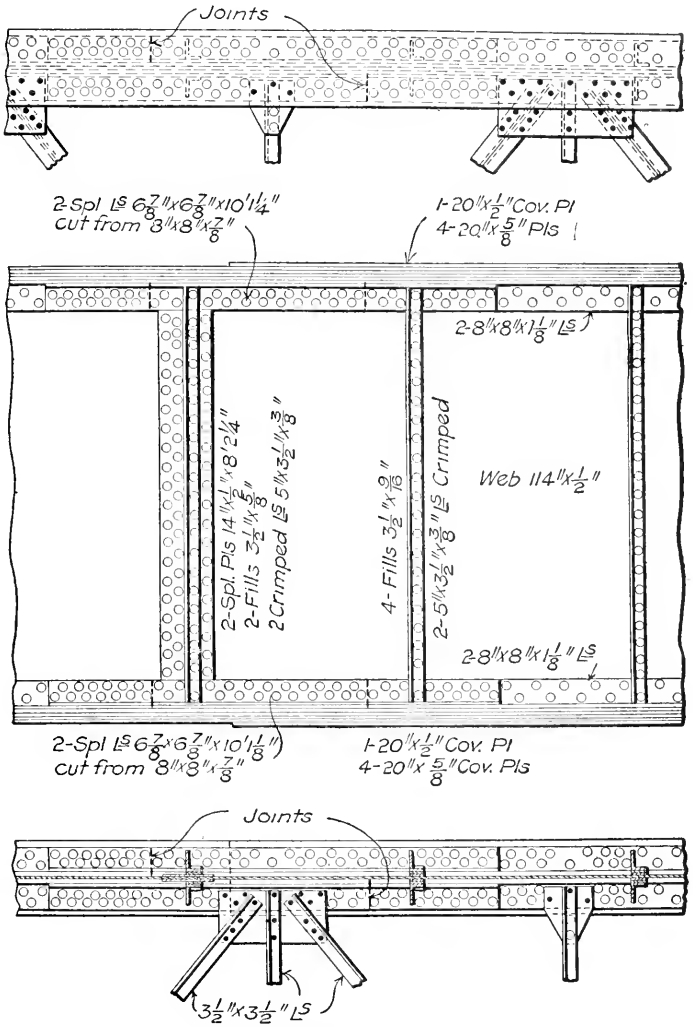

Lateral Connections and Splices.

$\frac{3}{4}$ in., and have joints from 15 to 20 ft. apart, all spliced with pairs of 14 × $\frac{1}{2}$-in. cover plates, with four vertical rows of rivets close together.

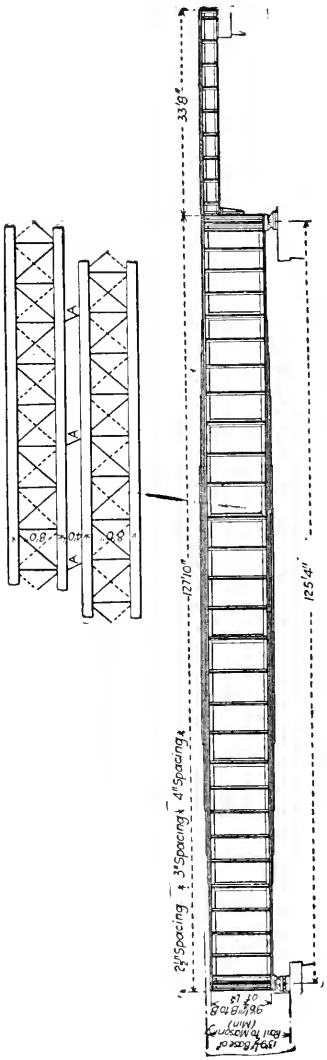

Elevation and Bracing. — Pine Creek Bridge.

The web stiffeners are, except over the bearings where there are extra ones, from 4 ft. apart at the ends to 5 ft. apart in the middle, and are all made with pairs of $5 \times 3\frac{1}{2}$-in. angles with double filler plates.

Each bottom flange angle is made in three pieces, those on one side of the web having successive lengths of 38 ft. $10\frac{3}{8}$ in., 54 ft. $7\frac{7}{8}$ in. and 34 ft. $3\frac{1}{4}$ in., while those on the opposite side have respective lengths of 33 ft. 10 in., 52 ft. $6\frac{3}{8}$ in., and 41 ft. $5\frac{1}{8}$ in. The corresponding top flange angles have the same lengths or are a few eighths inch longer, as required for the camber. This arrangement staggers the joints of the angles in the same flange on opposite sides of the web where they are alike for top and bottom flanges on the same side of the span center, but differ on opposite sides of the center. On one side both angles are spliced with a pair of cover angles about 10 ft. long, on the other side each angle joint is spliced with a separate pair of angles about 5 ft. long.

The girders have fixed ends at one abutment, and expansion ends at the other abutment, and at one pier both spans have fixed ends and at the other pier both have expansion ends. Riveted steel shoes are riveted to the lower flanges of each main girder, 125 ft. 4 in. apart on centers, and have $5\frac{15}{16}$-in. pins engaging the riveted pedestals, all being alike at fixed and expansion ends, except that the expansion end pedestals have roller plates which are omitted on the fixed end shoes. (See page 179.)

The 128-ft. girders are connected by sway-brace frames riveted to the vertical web-stiffener angles and by top and bottom zigzag lateral angles riveted to the flange angles and cover plates. The top laterals are pairs of $3\frac{1}{2} \times 3\frac{1}{2}$ to $5 \times 3\frac{1}{2}$-in. angles, and the bottom angle laterals are single $3\frac{1}{2} \times 3\frac{1}{2} \times \frac{3}{8}$-in. angles. The two inside girders are connected together by oblique horizontal struts composed of a pair of $3\frac{1}{2} \times 3\frac{1}{2} \times \frac{3}{8}$-in. angles, which are connected to the top and bottom flanges. The fixed river end of each short span girder is seated on a bracket which is riveted to the end vertical web-stiffener angles of the adjacent long span girder, and supports the live end and dead loads. Both spans are riveted together through the lower flange of the short girder, and through the end vertical angles of both girders. Sole plates $\frac{3}{4}$ in. thick and 19 in. wide are riveted to the shore ends of the lower flanges, and project about 4 in. beyond them on each edge to receive $1\frac{1}{2}$ in. wedge anchor

bolts through slotted holes 2 in. long. The plates are planed to a bevel of $\frac{1}{8}$ in. in their length to correspond to the grade of 0.61 per cent, and are seated on planed $\frac{3}{4}$-in. bed plates with pieces of sheet lead $\frac{1}{4}$ in. thick and $\frac{1}{2}$ in. longer and wider interposed between them and the stone abutment seats. The

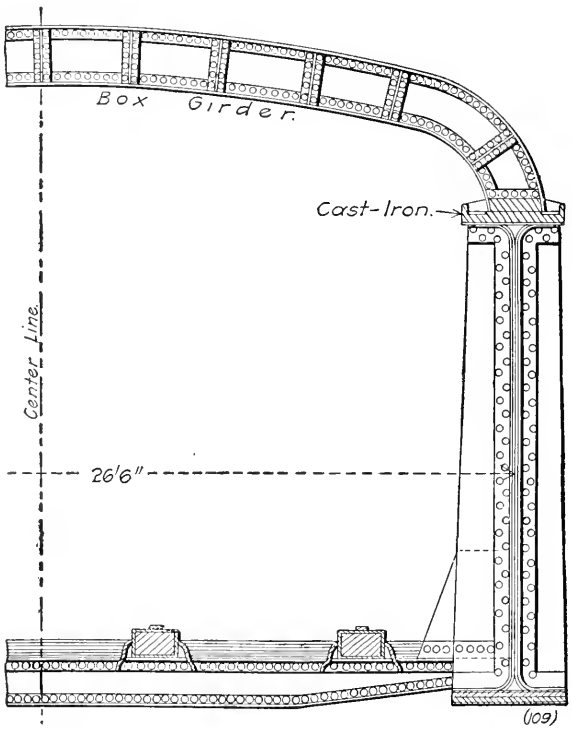

Intermediate Half Cross-Section.

Details of Girder, Floor, and Lateral Strut. — Bengal Bridge.

girders are made with single 32 × $\frac{9}{16}$-in. web plates and 6 × 6 × $\frac{11}{16}$-in. flange angles, reinforced by double thicknesses of 14-in. cover plates. The angles have a double row of rivets through their vertical flanges, and a single row through each horizontal flange. The web is divided into panels of about 4 ft. by pairs of $3\frac{1}{2}$ × 5-in. vertical angles and fillers, the outstanding flanges of the former affording connection at the ends and center of the span for the sway braces. The total weight of

the bridge is 789 tons, 24 tons being for the 33-ft. span, so that the weight of each 127-ft. 10-in. girder and its share of bracing is 127,500 lbs.

This bridge replaces a single track 384-ft. span designed for a lighter service than is now required. The new substructure was built underneath the old span, while the latter was in service, and piles were driven between the piers and false work erected to support the old span and the ordinary wooden tower traveler by which the former was taken down. In the middle of the bridge, one bent of piles was omitted, and the double panel there was spanned by long plate girders carrying the track stringers on a short intermediate bent of false work, and affording an increased width of waterway, which eventually proved very necessary to pass a great jam of logs which came down the creek in flood, and without it would have greatly endangered the false work which, as it was, required much labor to pass the logs safely through it.

The main girders were shipped whole from the bridge shop, and were unloaded from the cars near the site, by a 60-ton steam derrick car at one end, and a 40-ton car at the other end. They were set on skids near the track, and remained there until the old trusses were removed, when the derrick cars lifted them, carried them out on the false work and deposited them in place. The 8646⅞-in. field rivets were driven by pneumatic hammers.

Bengal Bridge, 170-ft. Through.

The longest railroad plate girder span on record is a double track bridge of the Eastern Bengal Railway system across the Pilalee River, which has a clear span of 170 ft. between abutments. It was built, probably in England, over forty years ago, and has two through girders 13½-ft. deep, and 26½-ft. apart on centers. The flanges are made without angles, and consist of flat horizontal plates 4 ft. wide for the bottom flange, and of flat castings, somewhat narrower, for the top flanges. The web plates are of double thickness, and their upper and lower edges are curved ninety degrees tangent with the flanges, to form riveted connections with the latter. The web is panneled by vertical stiffener angles, with their ends bent at right angles to correspond with the curved web plates and with their outstanding flanges riveted to stiffening plates of the full width of the flanges. Shallow plate girder floorbeams with drop ends are

riveted to the stiffener plates, and carry four lines of wooden track stringers in rectangular riveted iron troughs. The spaces between them being filled solid with floor planks. The girders are connected by overhead curved transverse braces 19 ft. apart, with closed rectangular cross-sections and interior diaphragm plates.

PART III

DETAILS OF BEARINGS AND SPLICES

Girder bearings should in all cases be designed to distribute the pressure uniformly over the masonry and reduce it to the proper intensity, should provide for the required elevation of the girder and for temperature and deflection movements, resist transverse and vertical displacement, and transmit lateral, vertical and longitudinal stresses to the substructure. All these requirements are usually met satisfactorily in short spans by single or double flat plates under the ends of the bottom flanges. For longer spans the girders should have hinges or their equivalents at the bearings, and should be longitudinally movable at one end. The most simple bearings are where girders are riveted directly through their end vertical flange angles, or are seated directly on the masonry or steel substructure. The latter case includes simple pedestals and pockets, usually provided only for sliding ends. Very long or heavily loaded girders are subject to considerable deflection and longitudinal displacement, with temperature variations which are usually provided for by pin or rocker bearings or their equivalents, and by cylindrical or segmental rollers. Each class may be made with riveted or cast pieces, and for convenience of comparison are so classified in the following examples.

The principal considerations in web and flange splices are to develop in them the greatest possible percentage of the maximum strength of the member and secure simplicity and easy shop and field work, facility of assembling and fitting, short projections for field splices, and the minimum number and length of field driven rivets. Web splices are always made with cover plates on both sides, and sometimes with top and bottom cover plates to splice the part of the web included in the flange area. Flange splices are usually staggered when made in the shops, and vary principally with the cross-section of the flange. The other details of girder spans are hardly separable from the general plans and elevations, and are chiefly covered by general specifications and regular practice in riveted work.

CHAPTER XIII

SIMPLE FIXED END BEARINGS

Fixed end bearings are generally designed to resist the maximum shear in the web, to transmit it to the girder support without injury to the lower flange, to distribute the maximum live and dead load over a sufficient horizontal area to give a uniform pressure within the limits approved for the masonry, to prevent longitudinal or transverse movement, and to transmit the horizontal lateral stresses to the substructure.

Shearing stresses are usually provided for by web reinforcement plates or by vertical web-stiffener angles, which are often spaced very much closer together at the points of support than elsewhere. In many cases the girder takes bearing through its lower flange seated on the substructure, and in such cases the flange is stiffened and its distortion prevented by carefully fitting the lower ends of the web-stiffener angles to a bearing on it. For short spans and light loads, with the girder supported on the masonry, it usually rests directly on the lower flange, with or without the interposition of a sole plate or bed plate, or both.

Generally, a sole plate $\frac{3}{4}$ in. or more in thickness is countersunk-riveted to the girder for a bearing piece, and has a length equal to that of the masonry bridge seat, and a width equal to or a little greater than that of the flange. Special pains should be taken to give this plate a good bearing on the lower edge of the girder web. When the loads are not great enough to require this plate to extend the full length of the bed plate, it is useful to define the limits of the bearing, to raise the girder above the masonry, to provide clearance for rivet heads, and to prevent the collection of moisture and dirt under the bottom flange.

When the sole plate is extended to distribute the pressure it is proportioned accordingly and its thickness is computed from the bending stress in the projecting portion, or the edges are stiffened, usually by vertical transverse gusset plates. The width of the sole plate is generally made great enough to receive anchor bolts clear of the girder flange, and the bed plate or pedestal under it is often omitted. When a bed plate is used

for short spans it is generally of rolled steel from $\frac{3}{4}$ to 1 in. thick, and is of about the same width and length as the sole plate, although if necessary it may be made somewhat larger to further diminish the masonry pressure.

The sole plate and bed plate are usually not planed for fixed end bearings, and they are either seated directly on the very carefully leveled cut-stone surface of the bridge seat, or elevated from $\frac{1}{4}$ in. to 1 in. above it and grouted, or seated on a filler plate of lead from $\frac{1}{16}$ to $\frac{1}{4}$ in. thick, which is soft enough to flow under pressure and provide a uniform bearing, regardless of any irregularities in the masonry surface. Two or four short vertical anchor bolts generally secure the girder flange and the sole and bed plate to the masonry. Ordinarily they are of small diameter, and the friction holds the girder securely enough to prevent much shear from being developed in them. The friction and the anchor bolts transmit the lateral stress to the masonry from the lateral diagonals, which are connected directly to the shoe plate or to the lower flange of the girder close to it.

Girders which are supported by other girders or trusses are often riveted through their vertical end angles, and this is also sometimes done when they are carried by steel trestle bents or towers. This mode of support increases the rigidity, and when both ends are so connected it transforms the girder to a continuous girder and reduces the maximum stresses, but is likely to develop difficulties with the expansion and contraction and to induce uncertain stresses if the supports settle or are displaced.

Erie Railroad Standards. — The fixed ends of standard short-span plate girders on the Erie Railroad have bearings on flat unplaned sole plates about 1 in. thick riveted to the ends of the lower flanges. They are long enough to reduce the pressure from maximum loads to 250 lbs. per sq. in. on the granite pedestals. They are about 4 in. wider than the girder flange, so as to receive the short anchor bolts clear of the latter, and they are seated on bed plates which are duplicates of those at the expansion ends, and rest directly on the accurately dressed and leveled masonry.

New York Central Standards. — The standard fixed end bearings for short-span plate girders on the lines of the New York Central & Hudson River Railroad are made with flat sole plates corresponding to those described for the expansion ends, except that they are not planed and are made with two pieces of equal dimensions. The lower plate is not riveted to the girder, but

has a thickness which, combined with that of the upper plate, equals that of the double plate at the expansion end. Each fixed end is anchored to the masonry by four 1-in. bolts 15 in. long, which pass through $1\frac{1}{4}$-in. round holes and have expansion wedges driven in their split lower ends.

Canadian Pacific Railroad Standards. — The fixed ends of an $87\frac{1}{2}$-ft. deck plate girder span on the Canadian Pacific Railroad have very simple standard bearings which consist of $40 \times 1\frac{1}{2}$-in. rolled steel plates 32 in. long, countersunk-riveted to the 16-in. flange cover plates. They are secured to the masonry by two $1\frac{1}{4}$-in. anchor bolts $14\frac{1}{2}$-in. long, and are planed to a bevel to correspond with the grade of the span.

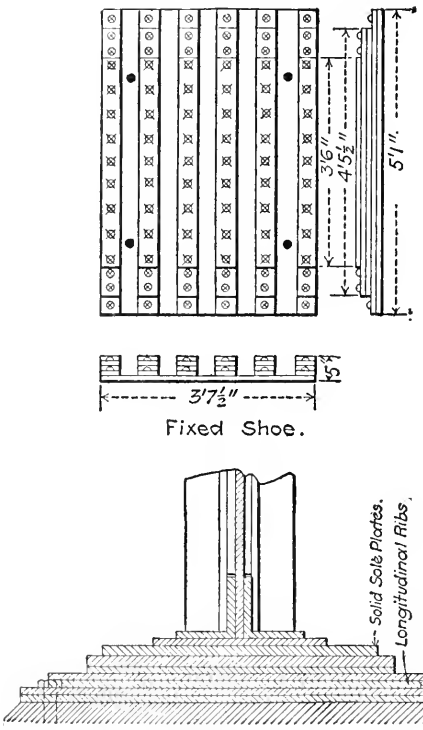

Oriskany Bridge, N. Y. C. & H. R. R. R.

Northern Pacific Railroad Standards. — According to the Northern Pacific Railroad standard designs of 1895, plate girder spans of 50 ft. and under had fixed end bearings on sole plates of the same width as the girder flanges. The sole plates were planed to $\frac{3}{4}$-in. thick and were seated on the planed bed plates with a $3 \times \frac{3}{8}$-in. longitudinal guide strip riveted to the upper surface each side. The bed plates were secured by two $1\frac{1}{2}$-in. anchor bolts through round holes in the girder flanges. The expansion end bearings were exactly the same, except that the anchor bolt hole was slotted in the girder flanges and sole plates.

Oriskany. — The fixed end bearing for the 87-ft. center girder of the double-track through span of the New York Central & Hudson River bridge at Oriskany, N. Y., is similar to that described for the expansion end, except for the omission of the roller nest. The sole plate is extended beyond the edges of the

flange cover plate, but is not planed and has no recesses in the edges. It rests directly on the transverse ribs of the riveted bed plate, which in this case has no cover plate. The bed plate is offset to extend the base plate to a width of 61 in., the same as for the expansion end, and it is secured to the masonry with four anchor bolts which pass through the spaces between the ribs and engage the sole plate outside of the girder flange.

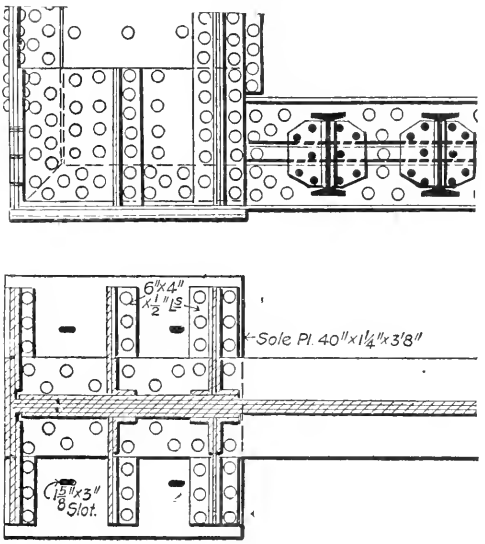

Reinforced Distributing Sole Plate.
Forest Park Bridge, Wabash R. R.

Forest Park Bridge. — A double track overhead bridge of the Wabash Railroad, at St. Louis, has three through plate girders 80 ft. long over all, with bearings on large sole plates. In order to distribute the loads over a sufficiently large area of abutment masonry that the unit compression may be reduced to allowable amounts, the sole plates are extended a long distance beyond the edges of the flange angles and are stiffened by three vertical transverse webs on each side. The sole plates are planed and are seated on planed bed plates to which they are connected by four vertical 1¼-in. anchor bolts 19¼-in. long, with nuts on their upper ends and right angle bends on the lower ends to lock in the concrete

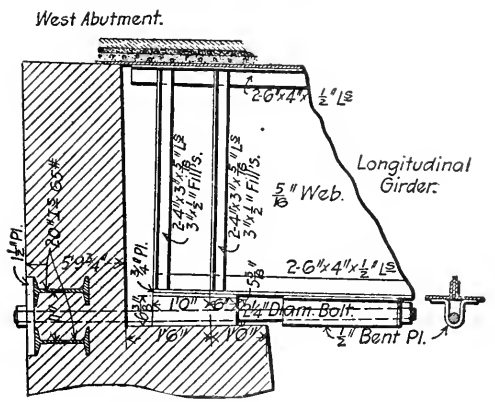

Abutment and Column Bearing, Fern Hollow Highway Bridge.

of the substructure. The bolt holes are round and slotted through the sole plates at the fixed and expansion ends, respectively. At the expansion end, the bed sole plate has a center guide rib engaging a slot planed in the bed plate.

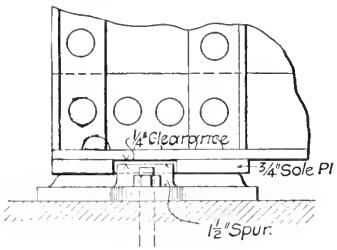

Enlarged Detail at A.

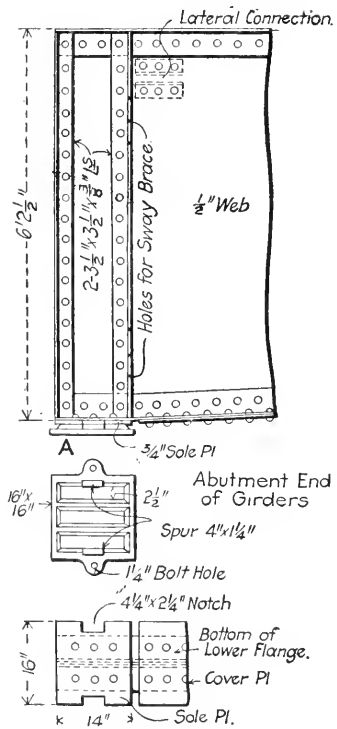

Harvard Highway Bridge.

Fern Hollow. — Where the longitudinal girders of the Fern Hollow bridge, Pittsburg, rest on the abutment masonry they are seated on cast-iron shoes, through which horizontal anchor bolts pass. One end of these $2\frac{1}{2}$-in. bolts passes through sleeves riveted to the bottom flanges of the girders; the other end passes through the face wall of the abutment above the girder seat and between a pair of horizontal I-beam anchors embedded in the masonry. Both ends have nut bearings. The top flange angles project beyond the ends of the girders and carry apron plates, which rest and slide on the edge of the masonry.

Harvard. — At the shore ends of the Harvard bridge, Boston, the 31-ft. $8\frac{3}{4}$-in. plate girders take bearings on 14 × 16-in. sole plates $\frac{3}{4}$ in. thick, which are countersunk-riveted to their lower flanges. These have $4\frac{1}{4} \times 2\frac{1}{4}$ in. notches in the center of each side, which extend almost to the edges of the flange angles and engage the 4 × $1\frac{1}{4}$-in. spurs on the upper surfaces of the cast-iron bed plates. The bed plates are made with a 1-in. base plate and three upper longitudinal ribs $2\frac{1}{2}$ in. wide and 1 in. thick, planed on top for bearing on the sole plate. The sole plates are not bolted to the bed plates, and the latter are anchored to the masonry by two $1\frac{1}{4}$-in. wedge bolts 12 in. long.

Marent Gulch. — There are two short deck plate girder spans at the end of the Marent Gulch viaduct of the Northern Pacific Railway in Montana. Their fixed abutment seats have lower flange bearings on cast-iron pedestals. These are apparently made with outside and center longitudinal and transverse vertical webs and a horizontal cap plate, but no base plate, the hollow interior of the pedestal being bedded solid in cement mortar on top of the masonry and secured to the abutment by bolts through outside bosses. At the other bearings the bottom flanges of the girders are seated between guide strips on the caps of the

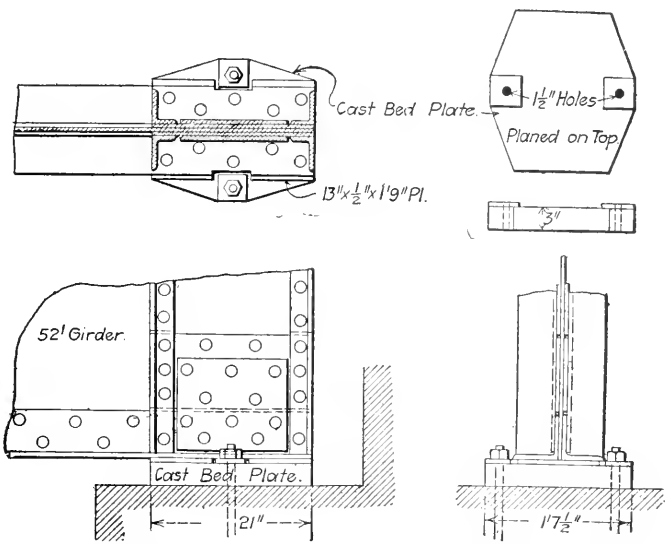

Woodsville Bridge Approach Girder Abutment Bearings, B. & M. R. R.

trestle columns, and the ends of adjacent girders are web spliced together through double cover plates riveted to the fixed girders and bolted through slotted holes for the expansion ends.

Woodsville. — The double-deck Woodsville bridge carries the highway and one track of the Boston & Maine Railroad across the Connecticut River. The railroad approaches are carried over the highway by short plate girder deck spans about 42 and 52 ft. long, on opposite sides of the river. At the river ends these girders are field-riveted through the flanges of their vertical web-stiffener angles to the webs of the end floorbeams of

the upper deck of the main span. At the shore ends both spans have bearings on sole plates countersunk-riveted to their bottom flanges. The sides project slightly beyond the edges of the flange angles, and, with them, are notched to engage guide lugs cast integral with the thick bed plates. The girders attached to the expansion end of the main span move perceptibly on the bed plates, and allowance is made in the side notches for their displacement. The girders attached to the fixed end of the main span can only move a small fraction of an inch under extreme variations of temperature, and so may be considered as having virtually fixed bearings, but they are for uniformity made exactly the same as at the expansion end of the bridge.

Eighteen-Mile Creek.— The 60 and 30-ft. plate girders of the double-track Eighteen-Mile Creek viaduct of the New York, Chicago & St. Louis Railroad are seated on the extended caps of the columns and on the transverse girders. (See page 130.) The column web plates are cut off about 5 ft. below the caps and are replaced by plates about 3 ft. wide, which project beyond the inner flanges of the columns in the planes of the webs of the transverse girders and are spliced to them with two cover plates with four vertical rows of rivets. These plates form jaws to receive the girder webs and have one row of shop rivets in the column plate and three rows of field rivets, thus securing sufficient spring to facilitate field assembling. The ends of the bottom flange angles are field-riveted to the extended column web plates and to horizontal shelf angles on the upper edges of the connection plates for the sway-brace diagonals. The transverse girders have vertical stiffener angles on both sides of the webs in the planes of the inner lines of the longitudinal girders. Each stiffener is a pair of $6 \times 3\frac{1}{2}$-in. angles 8 in. apart, back to back, with their narrow flanges riveted to the girder web. A U-plate, 12 in. wide, is riveted between the tops of the stiffener angles to form a seat flush with the under side of the top flange angles. This seat projects 6 in. beyond the edge of the flange cover plate, and is fillered up flush with its top to form an extended bearing for the lower flanges of the inner longitudinal girder which has a 12×30-in. sole plate, seated on one end of a 24×30-in. bed plate across the top of the flange and fillers. The sole plates are about 20 and 38 in. long for the 60 and 30-ft. outside girders respectively, and have four rows of rivets outside the flange angles engaging the bed plates at the fixed ends and corresponding bolts, through slotted holes at the sliding ends.

A clearance of 1 in. is left between the spans at the expansion ends and of $\frac{1}{2}$ in. at the fixed ends, and the joints between the top flanges are covered by short top plates with their edges bent down vertically to engage the edges of the flanges.

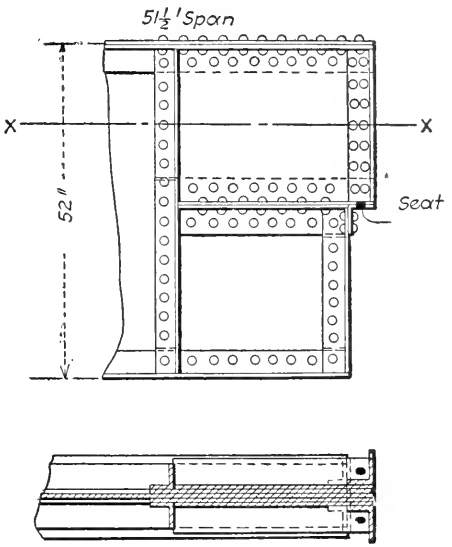

Fixed and Expansion End Bearings. Pennsylvania R. R. Viaduct in Jersey City.

Jersey City. — The four-track viaduct of the Pennsylvania Railroad in Jersey City, has regular 51½-ft. deck spans with eight lines of longitudinal girders, web connected at their fixed ends to the transverse girders. At every third, bent expansion bearings are provided with sliding drop ends. The end of the web is notched about 6 in. wide from the lower flange to the center line, and above the notch the end of the web is reinforced and has horizontal angles riveted to it about midway between the top and bottom flanges, to form a bearing on a seat on the transverse girder. This seat has a shelf angle with its horizontal flange reinforced by a pair of vertical angles back to back, with a filler plate between them, and with both ends milled to bearing on the flange and shelf angles. The longitudinal girder has slotted holes through its flange for anchor bolts in the shelf angle.

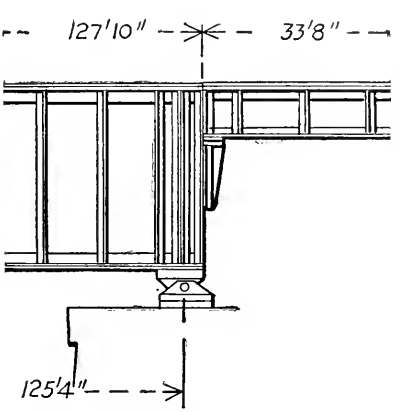

Pine Creek Bridge of N. Y. C. and H. R. R. R.

Pine Creek. — The short end span of the double-track deck bridge of a branch of the New York Central & Hudson River Railroad across Pine Creek, Pa., has the river end seated on brackets on the ends of the adjacent deeper girders, which in

turn have pin bearings through fixed shoes and pedestals. The brackets are made with vertical webs in the planes of the girder webs, and with vertical and horizontal flange angles for connections to the end web-stiffener angles of the long girders and to the cap plates, respectively. Both girders of the adjacent spans are also field-riveted together through the flanges of their end vertical web-stiffener angles, making the connection a fixed bearing and producing some of the conditions of continuous girders over a fixed support.

Plum Creek.— The single-track Plum Creek viaduct resembles several other river and valley crossings, built in 1889 for the

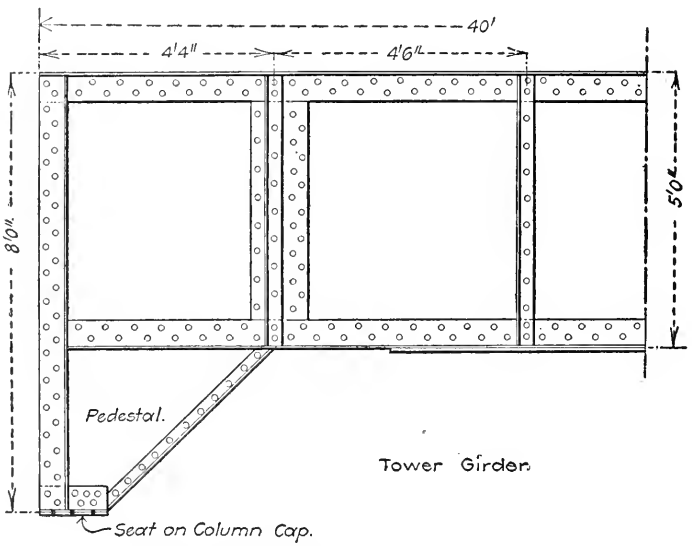

Plum Creek Viaduct, P. B. & L. E. R. R.

Pittsburg, Bessemer & Lake Erie Railroad, and is composed of 40 and 80-ft. plate girder spans on four-post towers from 15 to 120 ft. high. The towers are connected by 80-ft. deck girders 8 ft. deep, seated on the column caps. The 40-ft. tower girders have their top flanges in the planes of the top flanges of the 80-ft. spans, and, as their webs are only 5 ft. deep, are provided with pedestals to take bearing on the same column caps. The end sections of the girder webs project below the bottom flanges to make the pedestals integral with the girders, as shown in the accompanying detail, and thus makes a pedestal serve as a knee-brace.

Albany. — The New York Central & Hudson River Railroad deck plate girder viaduct, at Albany, N. Y., has three lines of longitudinal girders with their ends web connected to the columns. It has a solid trough floor and there are no transverse girders. The columns have H-shape cross-sections made with a web plate transverse to the bridge axis and four Z-bars. The girder flanges are cut to clear the column flanges and enter between the Z-bars. Vertical connection angles are shop-riveted to the ends of the girder webs and field-riveted to the column webs outside of the Z-bar webs. The lower flanges of the girders are seated on and field-riveted to the top flanges of kneebrace brackets on the column flanges. The kneebraces have double webs riveted to the Z-bar webs, and their $\frac{7}{8}$-in. cap plates are of the full column width and receive the $\frac{7}{8}$-in. sole plates on the girder flanges.

Fraser River. — The Fraser River bridge, New Westminster, British Columbia, has a complicated approach with three separate lines of plate girder viaducts for the highway, trolley, and steam car tracks. The highway spans have pairs of 54-in. girders 10 ft. apart on centers, which are field-riveted through their end vertical web-stiffener angles to flange plates on the battered columns of the vertical trestle bents. These columns are made of pairs of channels with their webs in longitudinal planes and are inclined 1 : 6, but the tops are bent vertical to receive the ends of the girders. (See page 133.)

The spans for the railroad and trolley tracks are skewed, and the longitudinal girders are carried by double-web transverse girders connecting the tops of vertical columns in single transverse trestle bents. In the through spans (see page 271) the lower flanges of the longitudinal girders are seated on, and field-riveted to, the top flanges of the transverse girders. In the deck spans, the longitudinal and transverse girders have their top flanges flush, and are web connected with vertical angles or plates bent to correspond with the oblique angles of the skews. The double webs of the transverse girders form jaws engaging the vertical trestle bent columns, and are field-riveted to them through both flanges of the channels of the latter. In some cases their lower flanges are also seated on and riveted to extended flange plates, which project from the column flanges and are stiffened with flange angles around the edges, forming stiff kneebrace brackets. Where the longitudinal girders are

connected to the transverse girders, the latter have both webs connected by transverse diaphragms.

Brooklyn Elevated R. R. Standard.— In the 1884 standards for the Brooklyn Elevated Railway, the longitudinal girders had drop ends seated on the top flanges of the transverse girders and making butt-joints on the center lines of the latter. The fixed ends were riveted and the expansion ends were bolted through slotted holes to the transverse girder flanges. The lower flange angles were flush with those of the transverse girders and were spliced across the latter by cover plates.

In the 1886 standard, this design was modified by seating the drop ends on wide connection plates projecting beyond the edges of the transverse girder top flanges, and by making the longitudinal girders shallower, so that their lower flanges cleared those of the transverse girders and were connected to horizontal shelf plates projecting from the webs of the transverse girders.

CHAPTER XIV

SIMPLE SLIDING ENDS

EXPANSION ends of plate girders are usually designed to provide for temperature variations and allow small longitudinal movements without permitting transverse or vertical displacement. They are often omitted at both ends of short-span girders, but are always provided at one end of single long-span girders and at one end of each span or of occasional spans, in a structure which consists of a continuous series of spans. Provision is accordingly made for movements of 2 in. or less. This is usually accomplished for short girders by letting the end of the girder slide freely on its lower horizontal flange between fixed longitudinal guides. Another method which has been applied to stringers, but is seldom or never used for girders proper, is to support them by horizontal bolts through slotted holes in the web. A large amount of care and ingenuity has been devoted to the design of expansion connections suited to different conditions, and it is an important and often a difficult matter to devise a connection that is efficient, economical, simple, easily constructed in the shop and quickly completed in the field.

In the simplest expansion detail, the girder takes bearing on the horizontal under surface of the bottom flange. In light, cheap work the flange angles sometimes rest directly on a bed plate bolted to the masonry and are secured to it by a vertical bolt through a slotted hole on each side. In heavier work there is a sole plate countersunk-riveted to the under side of the end of the flange and planed. It takes bearing on a rolled or cast bed plate, which is planed on the upper surface and is set immovably in cement or on a sheet of lead on the pier masonry. The bed plate may have a plain or ribbed upper surface, and lateral displacement may be prevented by anchor bolts through slotted holes in the sole plate and round holes in the bed plate, or by a tongue and groove or by outside guide strips on the bed plates.

When the girder is supported on a column cap or seated on top of another girder, the bed plate is generally omitted. When it is supported from a transverse girder, brackets, pockets, and drop

ends or some modification of them are generally provided, and when the girders act as stringers to carry the railroad track ties directly on their top flanges, it is sometimes difficult to provide a satisfactory detail.

New York Central Standards. — According to the present standards of the New York Central & Hudson River Railroad, plate girders of less than 75 ft. over all have both ends seated on flat sole plates riveted to the ends of the bottom flanges. These plates are made enough wider than the flanges to receive the anchor bolts, clear of the latter, and, at the expansion ends, they pass through $1\frac{1}{2} \times 2\frac{1}{2}$-in. slotted holes. They are planed on the under sides and slide on bed plates 1 in. thick, which have the same width and length as the sole plates and are proportioned to reduce the maximum pressures to 200 lbs. live and 400 lbs. dead load per square inch on concrete, and to 250 to 500 lbs. respectively, on stone pedestals. The bed plates are set on lead filler sheets $\frac{1}{4}$ in. thick and $\frac{1}{2}$ in. longer and wider than the bed plate.

Union Pacific Standards. — On the Union Pacific Railway standard plate girder bridges up to 100 ft. long are designed with several different types of bearings on the pier and abutment masonry. The shortest and lightest spans have simple sole plates and rolled steel masonry bed plates; longer and heavier spans have webbed cast-iron pedestals to distribute the loads and reduce the masonry pressure. Deck spans up to and including 70 ft. long have flat bearings sliding at the expansion end.

Single-track spans of nearly 20 ft. are made with three 20-in. rolled I-beams under each rail instead of single riveted plate girders. Each set of beams has an $8 \times \frac{3}{4} \times 31$-in. transverse sole plate riveted across the ends of the lower flanges and seated on $9 \times \frac{3}{4} \times 32$-in. bed plate. Both sole and bed plates are unplaned, and two $1\frac{1}{4}$-in. anchor bolts between the girders at each end pass through $1\frac{3}{8}$-in. holes in both plates. All girders except those with pin bearings, have sole plates riveted to their bottom flanges and planed to grade so as to have the bed plates of pedestals set horizontal.

Double-track through plate girders from 35 to 50 ft. long, have sole plates riveted to their lower flanges and seated on cast-iron pedestals, similar to those described for the short span deck girders except that they have only two transverse and three longitudinal webs and have no guide ribs projecting above the tops of their cap plates.

Bridesburg. — The double-track approaches of the Pennsylvania & New Jersey Railroad across the Delaware River at Bridesburg, Philadelphia, have four lines of 40-ft. deck plate girders seated on the top flanges of the transverse girders and on the column caps. Bearing plates concentric with double pairs of web-stiffener angles are riveted across the top flanges of the transverse girders, and project a few inches beyond their edges to give room for rivets and bolts through the bottom flanges of the longitudinal girders. At the expansion ends, guide strips are riveted to both edges of these plates to engage the edges of the

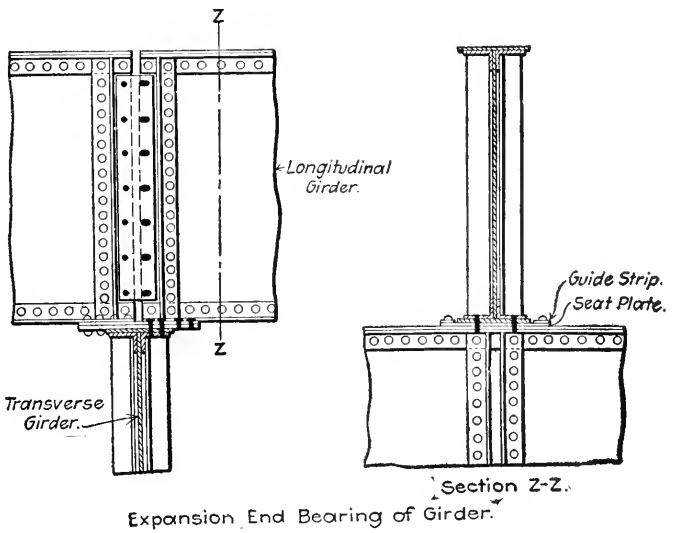

Bridesburg Bridge, P. R. R.

girder flanges, and the connections are made with bolts through slotted holes. The end web-stiffener angles of the longitudinal girders are set back about 4 in. from the ends of the webs so as to clear the pair of cover splice plates which connect the webs of the adjacent girders, and are field-riveted at fixed joints and bolted through slotted holes at expansion joints.

Williamsburg. — The 67½-ft. longitudinal plate girders in the main platforms of the approaches to the Williamsburg bridge, New York, are seated on the long extended caps of the vertical columns between guide plates, riveted each side of the girder to engage with a small clearance the edges of the sole plates which are countersunk-riveted to the under side of the girder flanges.

At expansion joints, on every alternate column, there is one fixed and one sliding girder end, with a clearance of about 1 in. between them on the center line of the column. The sliding end is bolted to the column cap through slotted holes, and supports on its upper flange half of the sole plate of the floorbeam. The sole plate is riveted across the bottom flange of the floorbeam and to the lower edges of a pair of transverse solid web vertical kneebraces, which stiffen it, distribute the floorbeam load on the girders, and prevent tipping or longitudinal displacement of the floorbeam. One end of the sole plate or floorbeam pedestal, is field-riveted to the top flange of the fixed girder and the other end takes bearing on the top flange of the sliding girder, which thus receives half the load and is free to move back and forth under it.

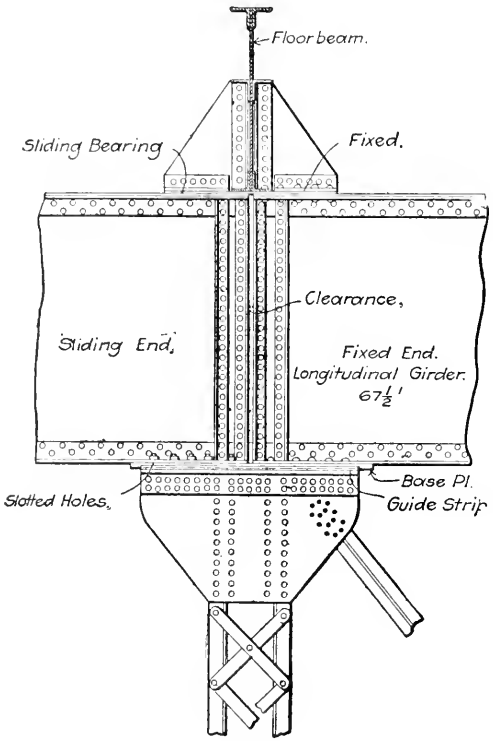

Expansion End of Main Longitudinal Girders.

Girders Sliding on Column Cap under Floorbeam, Williamsburg Bridge.

Atlantic Avenue.—In the four-track structure of the Atlantic Avenue Improvement viaduct, Brooklyn, N. Y., two of the eight lines of longitudinal plate girders are in the planes of the columns and are supported directly on their extended caps. One fixed end and one sliding end girder is seated at each expansion joint with a space of several inches between them, over the center of the column to allow for the continuous web and flanges of the transverse girder of the same depth seated on the same column cap plate, which is reinforced by kneebraces in four directions, in the girder planes. The sliding end is bolted to the cap plate through slotted holes,

and has slotted holes through the upper part of the web for horizontal bolts in diaphragms riveted to web-stiffener angles of the transverse girder. There are also vertical bolts which engage Z-shaped connections at the ends of the top flanges of the longitudinal girders, and pass through slotted holes in the top flanges of the transverse girders, and so secure the upper parts of both girders.

The other six lines of longitudinal girders are supported directly by the transverse girders. The expansion ends are seated on horizontal bracket shelves riveted to the transverse girder webs. Each shelf has a cover plate on the outstanding flange of a short horizontal angle which is reinforced by two pairs of angles perpendicular to the girder web, which are riveted both sides of the longitudinal flanges of two pairs of vertical angles which distribute the load on the girder web. In order to have room for sufficient rivets in these four vertical rows, the shelf has to be near the middle of the height of the girder, and as the bottom flanges of longitudinal and transverse girders are nearly flush, the ends of the former are notched to give them seats on the shelves.

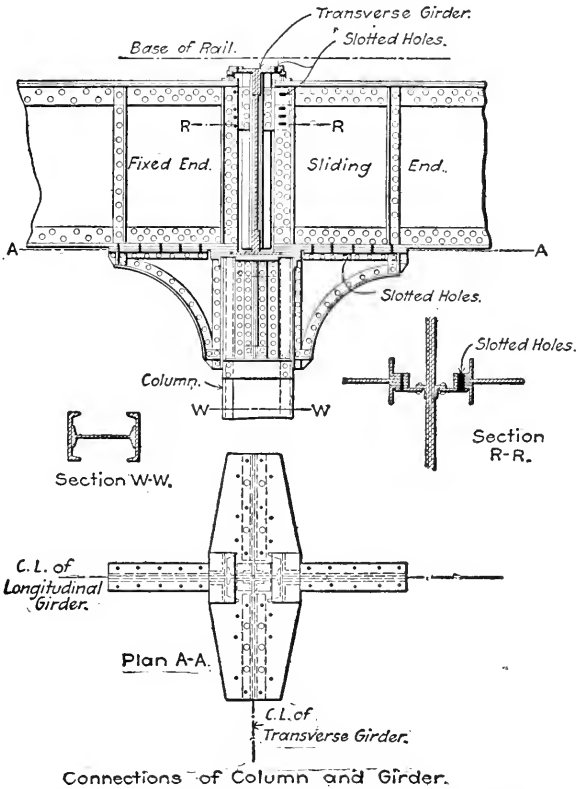

Square-End Expansion Connection and Z Connection of Top Flanges, Atlantic Ave. Viaduct.

The seat is made with a horizontal transverse angle riveted across the web stiffeners at the notch, and having its outstand-

ing flange reinforced by the milled ends of a pair of vertical angles. These angles have their longitudinal flanges turned

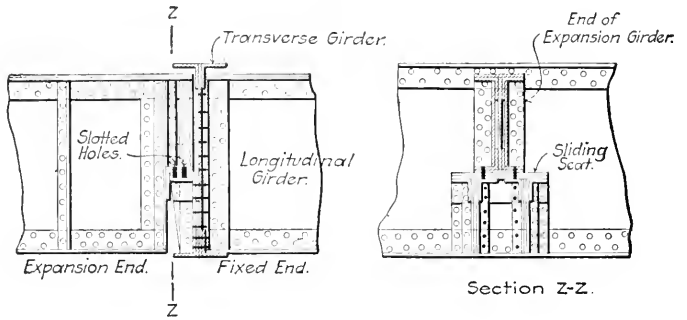

Connection of Intermediate Longitudinal Girders to Transverse Girder.

Drop-End Expansion Connection, Atlantic Ave. Viaduct.

toward the transverse girder, so as to provide the maximum clearance there and allow the field connection rivets to be driven

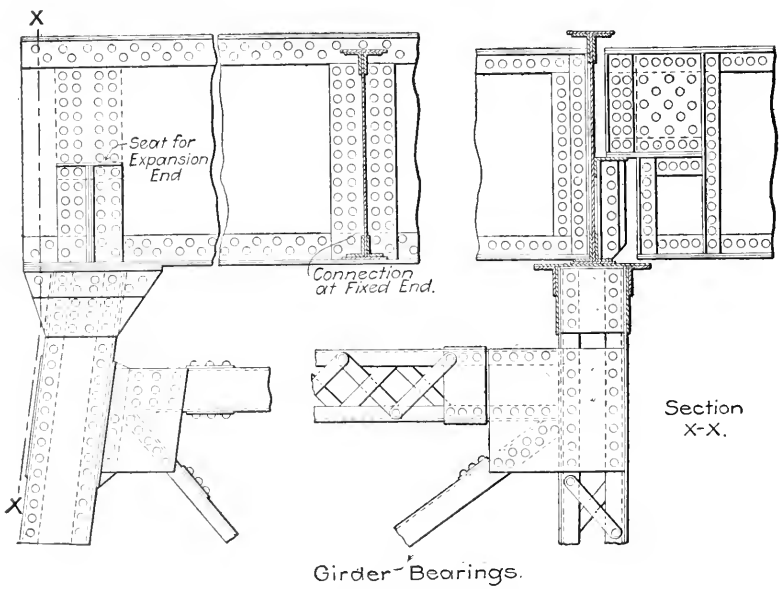

Square-End Fixed Supports and Drop-End Sliding Supports, Streets Run Viaduct, P. V. & C. R. R.

through the webs of the transverse girders and the fixed ends of the adjacent longitudinal girders, without difficulty, after both

fixed and sliding girders are erected. The girders are bolted to the horizontal seats through slotted holes.

Streets Run. — The double-track Streets Run viaduct of the Pittsburg, Virginia & Charleston Railroad is a very rigid structure with all connections riveted solid. Transverse girders are riveted across the caps of the inclined posts in the towers, and support four lines of longitudinal girders, two lines being on the centers of the batter posts. The fixed ends of the longitudinal girders are field-riveted to reinforcement plates on the girder webs, thus doubling the number of rivet bearings on the webs. Their expansion ends are notched and the webs are reinforced and have bent plate horizontal flanges on the lower edges, which are seated on pedestals riveted to the transverse girder webs. They are secured by vertical bolts in slotted holes, which allow longitudinal motion only and dispense with the necessity for lateral guide plates. The construction is strong and simple and avoids any difficult field riveting or troublesome assembling. In the elevation of the transverse girder both stringer connections should, of course, be alike, but in order to show both fixed and sliding connections, the one over the batter post is shown with an expansion seat and the stringer removed, and the other connection shows a fixed end stringer riveted in place. In the longitudinal elevation, the floor-beam is shown in cross-section and the fixed and sliding ends of the stringers meet on it as they do at every expansion joint.

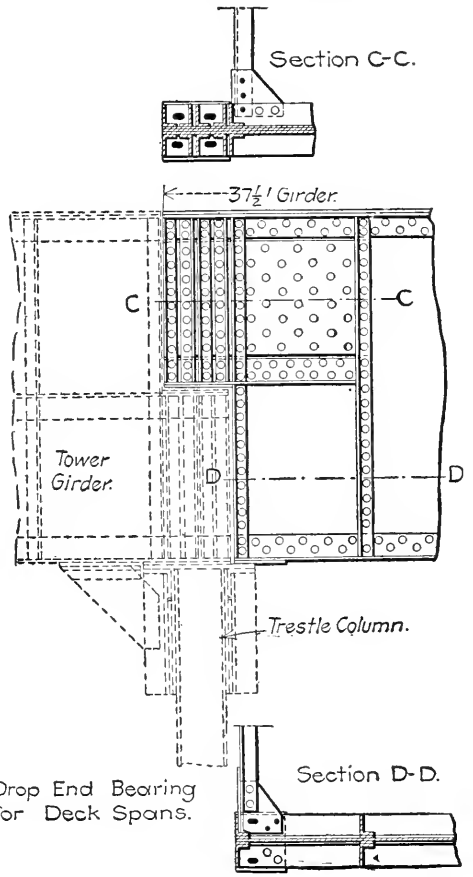

Des Moines Viaduct, C. G. W. Ry.

Des Moines River.—The 39 ft. 3 in. tower girders of the Des Moines River viaduct of the Chicago Great Western Railway, are seated with their lower flanges bearing on the tops of the trestle columns and nearly covering them. They are riveted to the column cap plates, and their ends are reinforced and notched to provide seats on which the drop ends of the 76¼-ft. connecting span girders take bearing. There is a slight clearance between the webs of the adjacent girders, and the long girders are bolted to the short ones by four vertical bolts through the sole plates on the drop ends. At the fixed ends these bolts engage round holes, and at the expansion ends slotted holes. The top flanges of the girders are connected by cover plates, which are field-riveted except at one end of the expansion joint plates, where they are secured by bolts through slotted holes. Both long and short-span girders have the same depth, and the lower flanges of the long girders engage the ends of the column cap plates to give direct connection for the lateral diagonals. The flanges are attached to the column caps by pairs of field-driven rivets and by bolts in slotted holes at the fixed and expansion ends, respectively.

Mill Creek.—The Mill Creek highway bridge, Cincinnati, has two plate girders 213 ft. long, with bearings on their bottom flanges, which are thin horizontal plates 42 in. wide, reinforced at two points only by transverse vertical diaphragm plates and by the 4 × 4 in. lower flange angles, which connect them to the web plate. At each bearing a cast-iron shoe plate about 46 in. wide, 3 in. thick, and 7 ft. long, is countersunk-riveted to the girder flange, and is seated between the longitudinal guide ribs of a cast-iron bed plate about 4½ in. thick and 7 ft. long. Three lugs project from each edge of this bed plate and are slotted to receive 1¼ in. anchor bolts. The bearings are the same at both ends of the bridge, and although both were free to move longitudinally with temperature variations, no indications of such movement were noticed when these details were sketched.

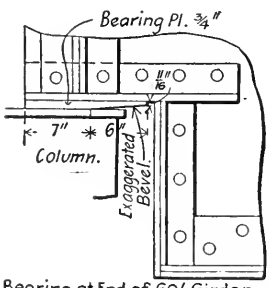

Gokteik Viaduct.

Gokteik.—The 40-ft. tower girders and 60-ft. intermediate span girders of the Gokteik viaduct, Burmah, have the ends of their lower flanges seated on the cap-plates of the trestle col-

umns. The 60-ft. girders being deeper than the 40-ft. girders, have their webs notched and horizontal flange angles riveted to them to give them bearing with the 40-ft. spans on the same cap plates, and still keep the top flanges of both spans at the same level. The arrangement is shown in the accompanying cut. The short girders have no sole plates, but the long ones have sole plates beveled at one end to concentrate the bearing on a distance of 7 in. next the end of the girder and keep it 6 in. from the edge of the cap plate. All girders are riveted to the column caps, except at the expansion ends of the 60-ft. girders, where the connection is made with bolts in slotted holes.

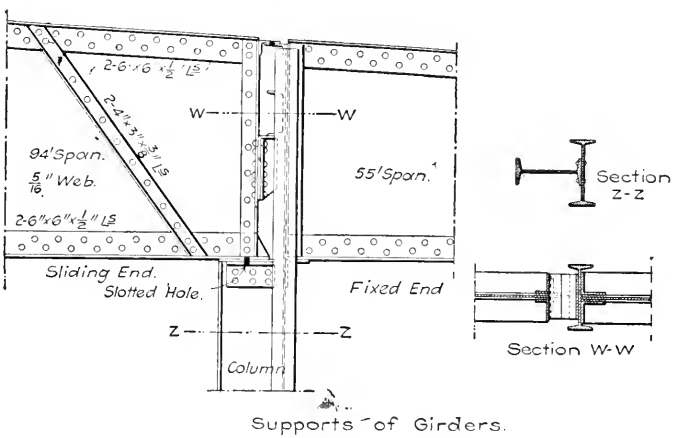

Consolidated Traction Company's Bridge, Newark.

Traction Company's Crossing. — The double-track overhead crossing of the Consolidated Traction Company's electric lines above the main tracks of the Delaware, Lackawanna & Western Railroad, between Jersey City and Newark, N. J., virtually consists of two parallel single-track plate-girder viaducts with a complicated system of skew spans, special supports, and different grades. The longest spans have plate girders suspended at one end from cantilever plate girders and at the other end carried by single vertical columns, which also support the ends of shorter plate-girder spans. Expansion bearings are provided for both ends of the long girders, but as one end is suspended freely and the other rests on a comparatively wide bearing surface, it is probable that most or all of the temperature movements occur at the former place.

At the column connection the lower flange of the girder is seated on the cap of one of the two unequal length I-beams of which the column is composed, and is securely bolted to it through slotted holes. The top flange of the girder is secured by a slotted bolted connection between the horizontal flanges of angles on the end of the girder and on the side of the column, and a very snug bearing against vertical displacement is provided by a reinforced angle shelf projecting from the middle of the end of the girder and engaging the flange of a short length of channel riveted to the web of the long I-beam in the column. The fixed end bearing of the girder in the adjacent span is made by field-riveting the end web-stiffener angles to the web of the column, thus giving great rigidity to the top of the column, which tends to hold the sliding end of the long-span girder in such a manner as to keep the flanges horizontal at this point under center deflection, and thus modify the stresses.

CHAPTER XV

POCKET EXPANSION BEARINGS

In recent construction, pocket seats for the lower flange bearings of the expansion ends of longitudinal girders in viaducts and elevated railroads have been extensively used. These are usually made with pairs of vertical gusset plates perpendicular to the transverse girder web and connected to it by special vertical angles, or by the regular web-stiffener angles. The bottoms of the gusset plates are connected by horizontal bearing shelves made with bent plates, angles, I-beams or channels, usually riveted to the transverse-girder web also, and affording a seat to which the lower flange of the longitudinal girder is usually bolted through slotted holes, although it sometimes merely rests there without any fastening. This type of connection avoids the undesirable features of drop girders, notched ends, or special ends for the longitudinal girders, and can distribute the load uniformly over the web of the transverse girder. It also affords a convenient

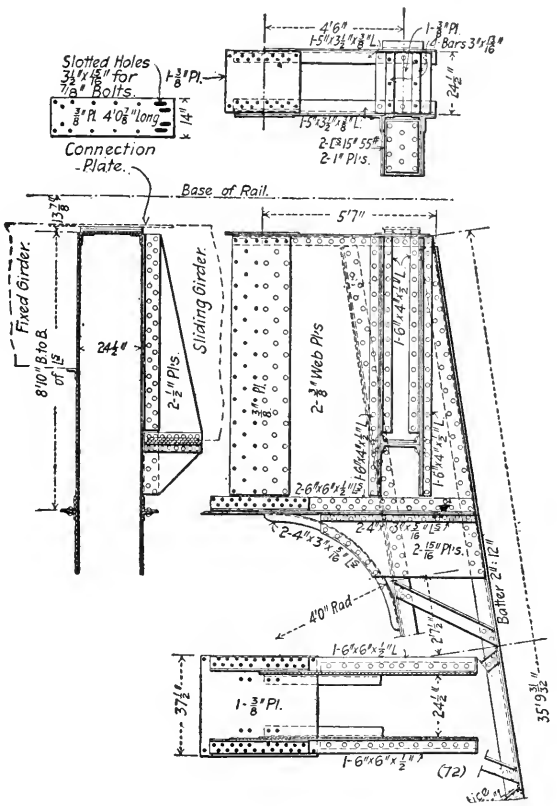

Kinzua Viaduct.

connection to vertical or batter posts of viaduct bents or towers, when it is desired to keep the girders below the tops of the posts.

Kinzua. — In the New Kinzua viaduct, the outside lines of the longitudinal girders have their expansion ends seated in pockets made with pairs of gusset plates about 8 ft. deep and 15 in. apart. Each plate is connected to the top of the trestle bent by a pair of 6 × 4-in. vertical angles, and is tapered from both ends to a maximum width of nearly 2 ft., near the lower end. At this point the gussets are connected by a pair of horizontal 15-in. channels, back to back, with a pair of 1-in. bearing plates countersunk-riveted to the web of the upper channel. The end of the girder is seated on this plate without bolts, but the top flange is flush with the top flange of the trestle top and is connected to it and to the adjacent fixed girder by a flange plate riveted to the latter and bolted through slotted holes to the sliding girder flange. This connection is virtually made both to the web of the double-web transverse girder and to the top of the battered column which it intersects on the center line.

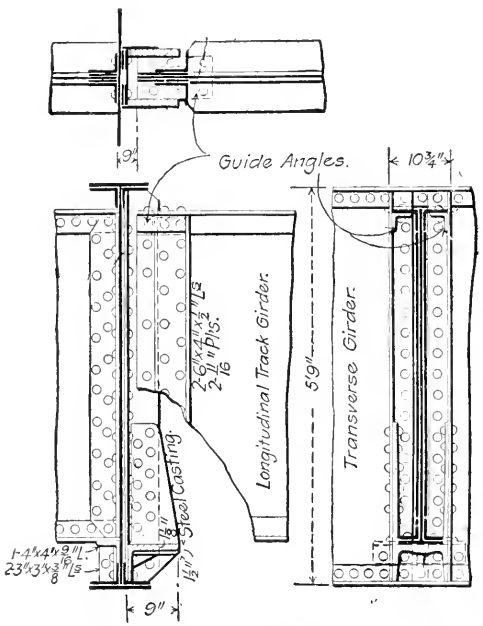

Williamsburg Bridge Elevated R. R. Girders.

Williamsburg. — The 40-ft. longitudinal girders of the double-track elevated railroad crossing the East River, New York, on the Williamsburg suspension bridge, have fixed and expansion bearings at every third panel point, the connections at intermediate panel points being all fixed. The fixed ends are connected to the transverse girders by field rivets through its web and the vertical end web-stiffener angles of the longitudinal girders. At the expansion ends, the girders are seated in H-shaped cast-steel saddle pockets riveted to pairs of web-stiffener

angles on the transverse girders, and having their lower edges fitted to bearing on the lower flange angles. The end of the lower flange of the longitudinal girder is cut to a neat fit against the sides of the pocket, and the top flanges have guide angles riveted to their under sides to engage the projecting flanges of the pocket angles. The end vertical web-stiffener angles of the longitudinal girder have their transverse flanges

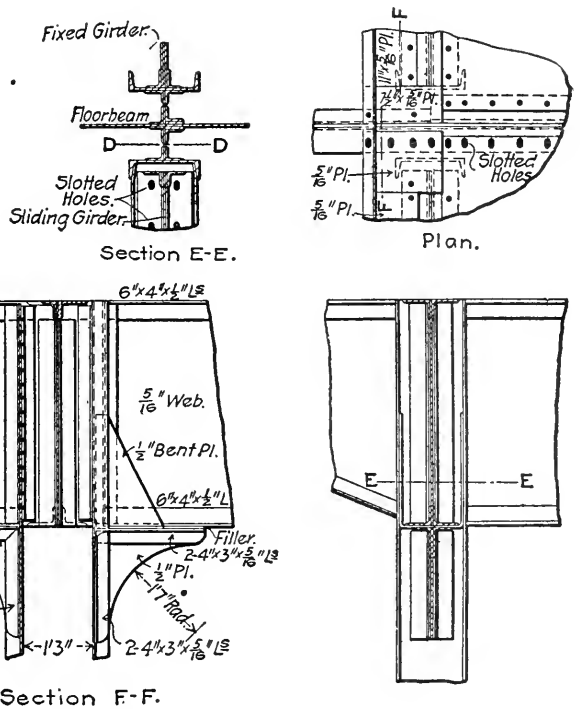

Fern Hollow Highway Bridge.

toward the center of the girder, and the reinforced web projects beyond their riveted flanges nearly to the transverse girder web.

Fern Hollow. — The longitudinal girders in the roadway platform supported by the arch spans of the Fern Hollow bridge, Pittsburg, are supported between abutments on vertical spandrel columns to which the fixed ends are field-riveted. The expansion ends slide in bent plate pockets riveted to the post flanges and reinforced by kneebrace brackets riveted to the bottoms of the pockets, and having in their top flanges, slotted holes through

which the girder flanges are bolted to retain them in position and allow longitudinal without transverse displacement.

Asylum Street. — Pocket connections for expansion girders for the Asylum Street viaduct, Hartford, Conn., and for the Suburban Rapid Transit Railroad, New York, were illustrated in Volume XXXVII, of the *Transactions* of the American Society of Civil Engineers. In the former structure the expansion longitudinal girders have drop ends with their lower flanges sliding on horizontal shelves about 15 in. sq., made with 15-in.

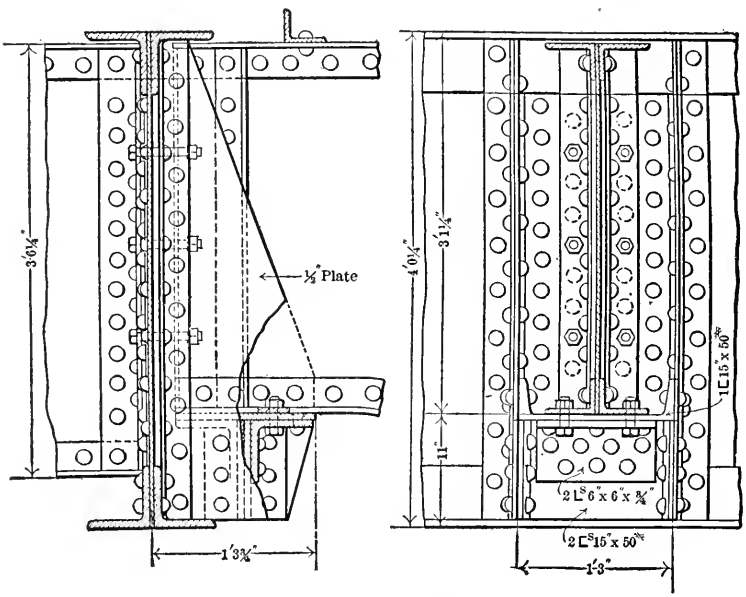

Asylum Street Viaduct.

channels, flanges up, riveted to gusset plates on pairs of vertical web-stiffener angles. The shelf channels are reinforced by bearing on the faced upper ends of pairs of short vertical 15-in. channels riveted together back to back, with their webs parallel to the transverse girder web and their flanges riveted to the gusset plates. Shelf angles are riveted to both sides of the webs, and the longitudinal girders are bolted to them through slotted holes in their bottom flanges. Three pairs of horizontal bolts through the vertical end web-stiffener angles of the fixed and sliding girders and the transverse girder web are made long enough to allow for temperature movements.

D. L. & W. R. R., Newark. — Longitudinal girders in the double-track 25-ft. spans of the Delaware, Lackawanna and Western Railroad, at Newark, N. J., have fixed and expansion connections on opposite sides of the transverse bents. The fixed end girders are field-riveted through their end web-stiffener angles to the webs of the transverse girders and to diaphragms between the column channels. The expansion ends are supported on long horizontal bearings on the bottoms of deep pockets projecting from the columns and the side of the transverse girder.

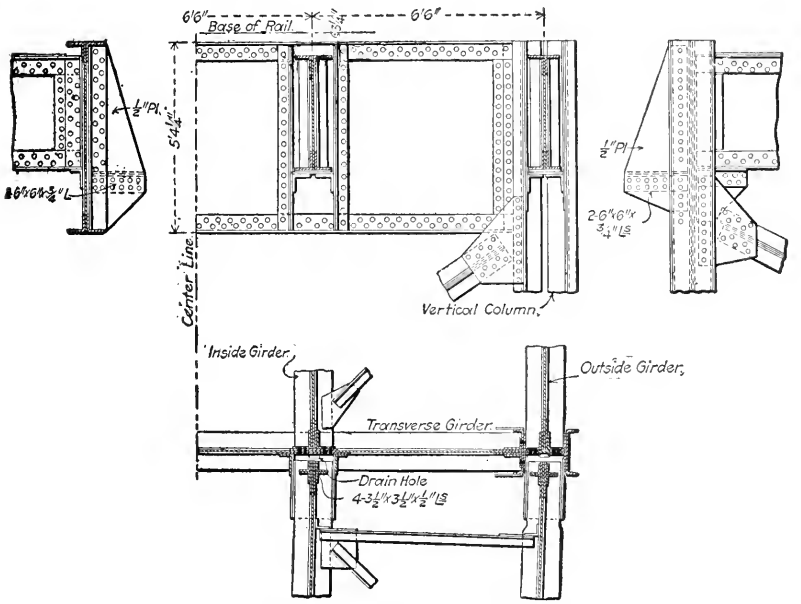

Newark Bridge, D. L. & W. R. R.

Each pocket is made with a pair of vertical longitudinal gusset plates having their lower ends connected by a horizontal diaphragm built up of a pair of 6 × 6 × $\frac{3}{4}$-in. angles and a $\frac{3}{4}$-in. plate. This forms a bearing nearly 2 ft. long for the bottom flange of the longitudinal girder, which is not bolted to it, but slides freely on it with about an inch clearance between the side plates, which act as guides and can resist the transverse component of the lateral stress.

Detroit Union Depot. — The expansion ends of the longitudinal girders of the Detroit Union Depot viaduct have their lower flanges seated on the horizontal upper surfaces of castings 13 in.

in diameter. These castings are made with two semicircular webs in planes parallel with that of the transverse girder and having their lower edges seated on a U-shape suspension pocket-plate riveted to the outstanding flanges of a pair of vertical web-stiffener angles. The castings are bolted to the transverse girder webs and the longitudinal girders are not in any way fastened to them. The edges of their lower flanges just clear the faces of the pocket plates so that the latter act as guides, and prevent transverse displacement. Longitudinal movement is limited by a pair of short vertical angles bolted to the

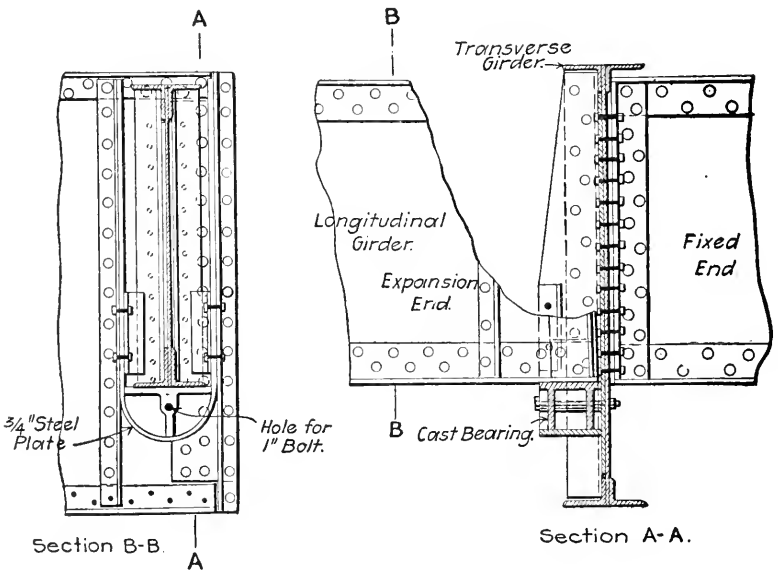

Connection for Longitudinal Girders.
Detroit Union Depot Viaduct.

insides of the pocket plates after the girders are seated in the pockets, and forming stops to engage the end vertical web-stiffener angles.

Brooklyn Elevated R. R. Standards. — The standard designs of 1889 and 1893 for the Brooklyn Elevated Railroad have the expansion ends on the longitudinal girders seated in pockets on the webs of the transverse girders. In the 1889 standard the lower corner of the web is notched and the flange angles bent to allow the seat to be as high as possible and the girder slides freely on it, being secured by horizontal longitudinal bolts through

the web of the transverse girder, through the end vertical angles of the adjacent fixed girder, and through the reversed flanges of the end vertical angles of the expansion girder. These bolts are several inches long so as to give room for temperature movements. Both top and bottom flanges of the longitudinal girders are clear of and between the flanges of the transverse girder.

In the 1893 standard the girders are not notched, and their horizontal straight bottom flange angles are seated on the pocket bottom plates and are cut on the edges to fit the side plates. The end of the web is tapered and the end web-stiffener angles are reversed and set parallel with it so as to clear and pass above the top flange of the transverse girder. The top flange angles thus clear those of the transverse girder and project across it to the center line where those of adjacent spans make a butt joint and are seated on horizontal bearing angles riveted to their vertical legs, and bolted to the transverse girder flange through slotted holes.

Manhattan Elevated R. R. — In an extension of the Manhattan Elevated Railroad, New York, the expansion ends of the longitudinal girders are seated on semicircular castings suspended from the vertical pairs of web-stiffener angles of the transverse girders, making virtually a pocket connection similar to that shown on page 149 for the Detroit Union Depot viaduct.

Chicago Elevated R. R. Standards. — In the Chicago Elevated Railroad the expansion ends of the longitudinal girders have sole plates on their lower flanges secured by bolts through slotted holes to shelves made of pairs of horizontal channels back to back, riveted between gusset plates which project from the webs of the transverse girders to form pockets. The edges of the top flanges of the longitudinal girders take bearing against horizontal guide angles riveted transversely to the under sides of the top flanges of the transverse girders.

Suburban Rapid Transit Elevated R. R. — The expansion ends of the longitudinal girders of the Suburban Rapid Transit Railroad, New York, are seated on the horizontal bottom plates of pockets riveted to the webs of the transverse girders, and their top flanges just clear the under sides of the top flange angles of the transverse girders. They are secured by horizontal bolts through the end vertical web-stiffener angles and through the webs of the transverse girders which are long enough to allow for temperature expansion and contraction. There are no flange bolts at bearings.

Manhattan Elevated R. R. — In the Fordham extension of the Manhattan Elevated Railroad the expansion ends of the longitudinal girders have sole plates riveted to their lower flanges, beveled to suit grade, and connected by bolts through slotted holes to the horizontal bottom plates of pockets on the faces of the transverse girders.

CHAPTER XVI

PLAIN ROLLER BEARINGS

For medium and long spans, especially where the loads are heavy, it is desirable to provide some means of facilitating the longitudinal movement of the expansion ends of the girders without throwing too great a buckling stress into the flanges. This is generally done in one of three ways, by seating the end of the girder on horizontal transverse rollers, by supporting it on a rocker bent, or, sometimes, by suspending it from vertical links. When rollers are used they may be either cylindrical or segmental, and may be inserted directly under the lower flange or its sole plate, or they may support a shoe which is pin-connected to the girder.

The rollers are usually notched in the center to engage upper and lower longitudinal guide ribs, which lock them transversely to the girder and to the bed plate and prevent lateral displacement. They are generally held together by shouldered bearings or tap bolts in side strips, which are sometimes also connected by tie bolts parallel with the rollers. The upper roller bed is usually additionally secured by anchor bolts passing through longitudinally slotted holes in it, and round holes in the lower plate and rigidly secured to the masonry.

The roller bed plates are made in several different ways, of solid, thick, rolled, or cast-steel or cast-iron plates, or riveted steel plates, cast-iron or steel pedestals, and sometimes where the loads are very heavy, I-beam grillages are used to distribute the loads and reduce the unit pressures on the masonry ; these grillages have top and bottom cover plates countersunk-riveted to the beam flanges. Special pains are frequently taken to prevent the accumulation of dust and moisture around the rollers, both by excluding them as much as possible and by providing for their easy removal. Sometimes flanges or side pieces are made to enclose the rollers as tightly as possible, and sometimes the roller beds are made in the form of longitudinal ribs, with wide open spaces between them, to receive the dust and water. One prominent designer has used a case filled with oil, in which the rollers work.

The simplest form is a nest of rollers, journalled in narrow end strips and taking bearing between sole plates riveted to the girder flanges and bed plates bolted to the masonry, on which, like fixed end bearings, they may be seated directly on dressed surfaces, or on granite or mortar beds, on bolsters to compensate for low, level seats, or on sheets of soft lead which is intended to flow under the load and insure uniform distribution of pressure.

Oriskany. — The expansion bearing for a very heavy long span through plate girder at Oriskany, New York, has a nest of twelve 3-in. rollers 34 in. long which are seated on a riveted bed plate with the edges offset to increase the width of the bearing considerably above that of the girder flange. The girder is the center one of three in a two-track bridge of the New York Central & Hudson River Railroad, is 87 ft. long and weighs about

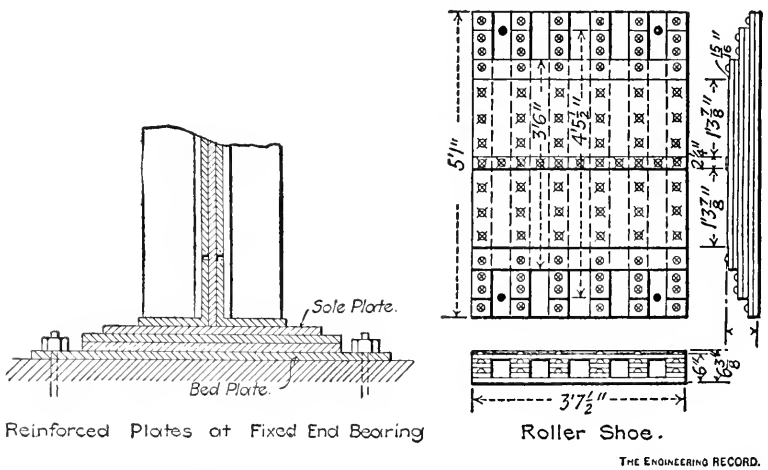

Oriskany Bridge, N Y. C. & H. R. R. R.

142,000 lbs. A 37 × 1-in. sole plate is riveted to the 24-in. flange cover plate and the edges are rebated $1\frac{1}{2} \times \frac{5}{16}$ in. to clear the edges of the side bars of the roller frame. The top plate of the roller bed is similarly rebated, so that the side bars, which are $\frac{3}{8}$ in. wider than the diameter of the rollers, engage the shoulders of the plates and form dust guards protecting the roller bearings at the same time that they have $\frac{1}{8}$ in. clearance between their upper and lower edges and the bearing plates.

The rollers have the usual center notch, engaging top and bottom longitudinal guide ribs, but their lower bearing is on a pair of plates countersunk-riveted together and fillered up about 4 in. above the base plate by six piles of 4 × 1 in. transverse plates about 4 in. apart in the clear, between which there are open spaces. The ends of these plates are stepped off, and they are proportioned to transmit the concentrated load on the rollers to the masonry and reduce it to the allowed unit pressure there, without developing too large a fiber strain on the material subjected to a bending moment. The bed plates are secured to the masonry by four small anchor bolts between the transverse ribs, which pass through the outer edges of the base plate only and do not engage the sole plate on the girder.

Erie R. R. Standard. — Short span girders on the Erie Railroad have, according to present standards, simple roller bearings for the expansion ends. Sole plates are riveted to the bottom flange plates and if necessary for a proper diminution of the unit pressure, are made to project not more than 4 in. each beyond the edges of the flange or of the preceeding plate. They are slotted to receive a center guide strip and are seated on cylindrical rollers of 3 in. minimum diameter with bed plates made of rolled plates riveted together in a similar manner to the sole plates, that is, with projecting edges if necessary. The longitudinal edges of the upper part of the bed plate and of the lower part of the sole plate are planed to close fit against the end strips connecting the rollers, which overlap them and thus make dust guards.

Grand Trunk R. R. Standards. — Plate-girder spans of nearly 90 ft. on the Grand Trunk Railroad, Canada, have bearings on sole plates, which are very thick and wide enough to project beyond the flange angles, and receive the bottom lateral connections and anchor bolts. At the expansion end they have transverse angles at the ends to limit the movement of the cylindrical rollers, and vertical longitudinal side plates tap-bolted to their edges and inclosing the bed plates to exclude dust. The rollers are made without slots but are guided by ribs planed on the outer edges of the sole and bed plates. When the bridge is on a grade the sole plate is correspondingly beveled to give it a horizontal under surface.

Canadian Pacific R. R. Standards.— Short span girders on the Canadian Pacific Railroad have bearings on thick eccentric sole plates, which extend a little beyond the flange on one edge

and farther on the other, so as to receive the single anchor bolt. At the expansion end a center longitudinal slot is planed to engage a corresponding guide rib planed on the $1\frac{1}{2}$-in. bed plate. There are bed plates without guide ribs at the fixed ends, and at both ends they are seated on $\frac{1}{8}$-in. sheet lead fillers.

CHAPTER XVII

FLANGE-BEARING PEDESTALS

THE ends of girders are often seated on the horizontal upper surfaces of simple pedestals for various reasons, such as to raise them above the masonry for purposes of inspection, maintenance, and to avoid accumulations of ice, snow, or dirt and rubbish in narrow or obscure spaces under their flanges; to adapt new girders to old masonry; to allow for different heights of masonry or of track at opposite ends of the girders; to save masonry by utilizing lower piers; to distribute the girder loads over a larger surface of the masonry than can be advantageously done with direct bearings, or to allow space for convenient lifting or moving of girders.

Sometimes the girders are seated on beam grillages, girders, or short transverse bents; these may virtually act as pedestals, but are of special design demanded by local conditions and are not here considered. Separate pedestals are usually provided for each girder and take bearing against their lower flanges with or without bolts or rivets. Their upper surfaces are generally planed, and at the fixed ends are plain and have outside guide ribs at the expansion end. They are usually made with two or three longitudinal webs, braced by one or more transverse webs and sometimes have additional diagonal webs stiffening the corners of the base plate, all webs being vertical. The base plate is usually larger than the cap plate, with lines joining corresponding points in the edges of both, making an angle of 45 degrees or less with the vertical. They usually have separate bolts connecting them to the girders and to the masonry, sometimes have connections for lateral members, and are sometimes riveted, but are generally of cast-iron or cast-steel and should then have all metal 1 in. to $1\frac{1}{2}$ in. in minimum thickness, with all angles filleted.

Boller & Hodge. — Messrs. Boller & Hodge, New York, have designed standard sets of cast-iron shoes and pedestals for plate-girder supports which have been used for a large number of railroad bridges. The smallest has a base of 16 in. square and

the lengths of the sides vary by increments of 4 in. They are designed to distribute the loads uniformly on the base and to reduce the intensity of pressure to 200 lbs. per sq. in. on the concrete on which the pedestals are assumed to be supported, or the equivalent cement mortar with which they are leveled up on stone seats. They are made of tough gray cast-iron, which it is specified must be strong enough for a sample test piece 1 in. square and 12 in. long to bear a center bending load of 2500 lbs. The thickness of the metal varies from $\frac{7}{8}$ to $1\frac{3}{4}$ in., and all angles are filleted with a radius of 1 in.

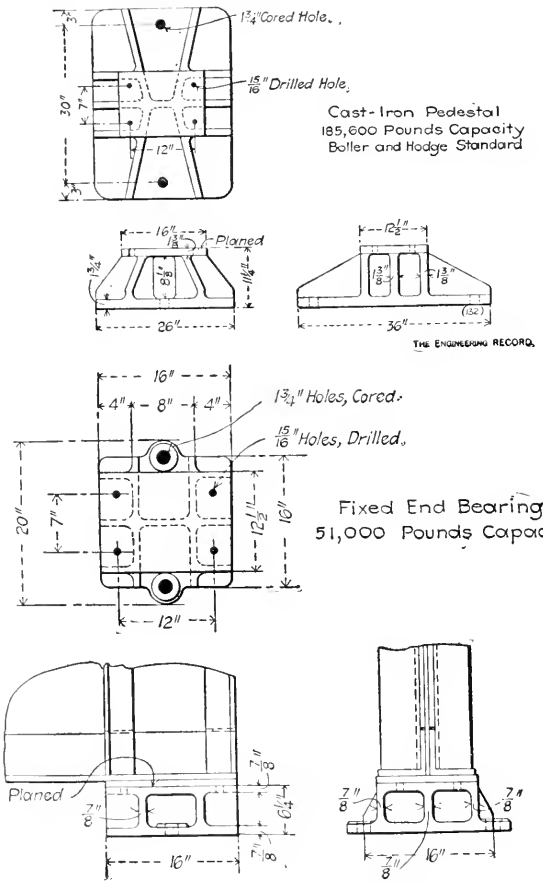

Boller & Hodge Standards.

Short-span girders have both ends fixed and seated on single-piece pedestals with planed flat tops supported on longitudinal and transverse vertical webs. The bottom flanges of the girders are secured to the pedestals by four $\frac{7}{8}$-in. bolts, and the pedestals are fastened to the masonry by two $1\frac{1}{4}$-in. stone bolts 15 in. long. The largest size is 36 in. wide, 26 in. long, weighs with bolts 825 lbs., and has a capacity of 185,600 lbs.

Armour Ave.—The 69-ft. plate girders of the three-track crossing of the Chicago Junction Railroad over Armour Ave., have

their lower flanges seated between guide strips integral with the planed tops of vertical webbed cast-steel pedestals, which give an increased width of bearing on the masonry. The end panel of the girder is as long as the pedestal, and its web is reinforced by two thicknesses of plates on each side. The 20-in. bottom flange cover plate is cut to clear the pedestal and allow the bearing to be directly between the flange angles and the top of the pedestal, which are connected by $1\frac{1}{4}$-in. bolts in drilled holes.

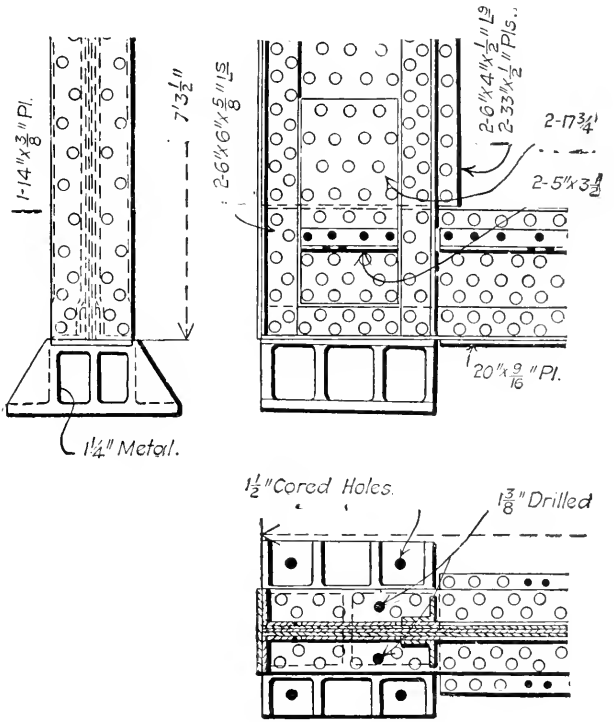

Armour Ave. Bridge, C. J. R. R.

Newark. — The center span of the three-track bridge of the Central Railroad of New Jersey, at Newark, N. J., is at a considerable skew, and the four plate girders vary from 50 to 70 ft. in length. Sole plates riveted to the ends of their bottom flanges are bolted to the cap plates of riveted bolsters which at one end are seated on column caps, and at the other end on the pier masonry. These bolsters are of different sizes for the light and heavy girders and have larger bases at the pier than at the trestle, bent so as to diminish the unit pressure on the masonry.

They are all essentially like the one shown, which is for a heavy girder at the column end, and differ from it only in dimensions. Each has two vertical webs transverse to the girder web, and a center transverse diaphragm. They are made with metal $\frac{3}{4}$ in. thick throughout, and really serve as deep transverse distributing girders and pedestals combined.

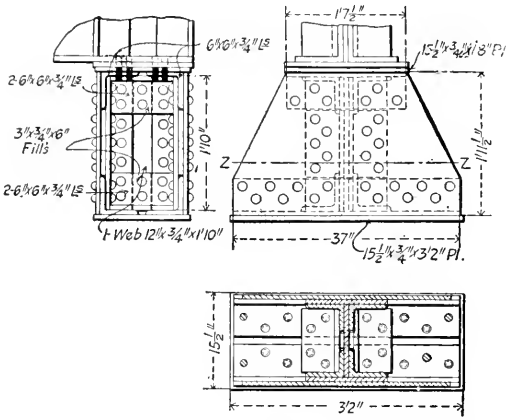

Pedestal P on Column Caps under Heavy Girder.
Corresponding Pedestal on Pier Masonry similar but larger.

Newark Bridge, C. R. R. of N. J.

Union Pacific R. R.—Plate-girder spans of 60 and 70 ft. on the Union Pacific Railroad have riveted to their bottom flanges sole plates with planed edges, engaging longitudinal guide strips on the edges of the upper surface of rectangular cast-steel pedestals with three longitudinal and four transverse vertical webs and extended base plates. The girders are bolted to the pedestals and the pedestals are anchored to the masonry.

Baltimore & Ohio R. R. — Plate-girder spans of 80 ft. and less on the Baltimore & Ohio Railroad are seated at both ends on rectangular cast-iron pedestals having an **H**-shape cross-section with one longitudinal and two transverse vertical webs. The sole plate is bolted to the pedestal cap through round holes at the fixed end and slotted holes at the expansion end, and the extended base is seated on a lead-bearing plate.

CHAPTER XVIII

PIN BEARINGS IN CAST EXPANSION SHOES

When the span is long enough to make roller bearings necessary, the deflections become perceptible, and the accompanying distortion is often sufficient to seriously derange the end bearings on a long horizontal surface and to tend to concentrate it on the inner edge of such a support. The most common way of providing for this condition is to give the girder a pin bearing in a shoe similar to a shoe for a truss span, or by supporting it on a pin directly through the girder web. The shoes are generally bolted or riveted to the lower flanges of the girder and should provide a pin bearing in the plane of the girder web. They are made either of rolled plates and shapes, riveted, or of cast-iron or cast-steel.

The shoe pins engage corresponding pedestals which are seated on nests of segmental or cylindrical rollers which usually have guide ribs, end connections, and bed plates corresponding to those described for the plain roller bearings except that they are larger and heavier, and that the bed plates are sometimes more elaborate and may be made of sets of longitudinal beams or their equivalents, such as rails. Pains are often taken to provide extensions from the base plate to inclose the rollers and prevent accumulations of dirt or moisture on the bed plate. The pin bearing provides for the symmetrical application of the load and uniform distribution of pressure, regardless of deflections, and the shoe is designed to permit longitudinal movement freely between limits without allowing any transverse or vertical displacement. Lateral stresses are usually transmitted by guide strips from the shoe through the rollers to the bed plate, and from the latter through anchor bolts to the masonry. Vertical anchor bolts generally pass through close fitting holes in the bed plate and through longitudinally slotted holes in the shoe base, but their principal efficiency is by holding the bed plate by their shearing strength.

Erie R. R. Standard. — Very heavy girders or those over 60 ft. long, have standard pin bearings on the Erie Railroad.

The girder web is made to bear on the lower flange cover plate, and to the latter is riveted a cast-steel shoe with single transverse and triple longitudinal webs. The pedestal has a center web in the plane of that in the shoe and has side webs clearing those of the shoe. All the side webs have full hole pin bearings, locking shoe and pedestal together, and the pin has a continuous bearing in the thick transverse web of the shoe. The pedestal is seated directly on the masonry at the fixed end and on cylindrical rollers at the expansion end. The rollers have wide end and side plates to exclude the dust and are seated on a riveted double thickness bed plate with center guide rib. The longitudinal edges of the upper part of the bed plate and the base of the pedestal are planed to a close sliding fit with the end strips of the roller frame.

Boller & Hodge. — A standard cast-steel pin-bearing roller shoe for long plate-girder spans has been used by Messrs. Boller & Hodge for many bridges, and with pedestal, rollers, bed plate, and pin complete, of the dimensions illustrated, weighs 2543 lbs. It has a capacity of 324,000 lbs. when calculated as reducing the pressure to 250 lbs. per sq. in. on the concrete masonry on which it is assumed to be seated. The shoe is a simple ribbed casting with a flat, planed top, which bolts to the bottom flange of the girder and has on the under side a long semicircular bearing for the pin. The pedestal has a similar pin-bearing, supported by longitudinal transverse and diagonal vertical ribs, which are made high enough to provide for a base large enough to distribute the load over a sufficient masonry area and diminish the intensity of pressure to the required limit of 200 lbs. per sq. in. The pin is made with a center rib, and this, with the recessed nuts engaging planed bosses on the webs of the shoe and pedestal, lock the latter in position and prevent relative transverse motion. The pedestal has low vertical flanges around the sides of the base plate, which is planed on the bottom and has, for the expansion end, a transverse rib to engage the rollers. Four lugs with horizontal extensions of the base plate, stiffened by vertical webs, are cast on opposite sides of the pedestals and have slotted holes to receive the $1\frac{1}{4}$ in. anchor bolts, which are clear of the roller bed plates. The rollers have shoulders engaging the horizontal side strips which form the roller frame. Necks of alternate rollers project through these strips and are secured by cotters; the others are cut off flush with the outside of the

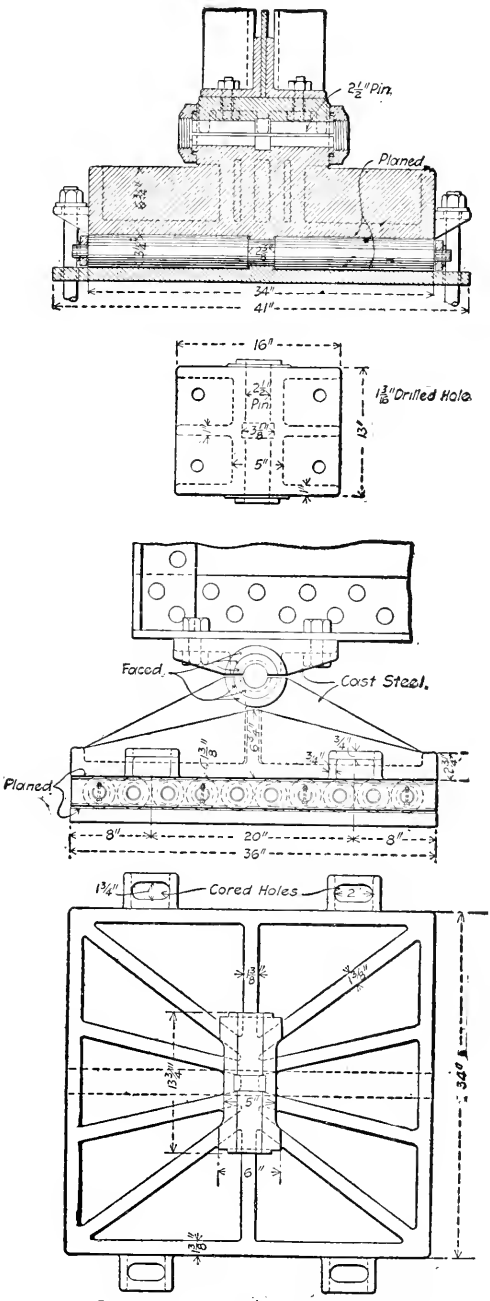

Standard Pedestal. 324,000 Pounds Capacity.
Boller and Hodge Engineers.

Boller & Hodge Standards.

strip. The roller bed is planed from a steel plate 2 in. thick and has a center guide strip $\frac{3}{8}$ in. high.

Bridge No. 7, Erie Railroad. — The expansion ends of bridge No. 7, Bradford Division of the Erie Railroad, a single-track plate-girder bridge about 128 ft. long over all, have roller bearings made with cast-steel shoes and pedestals. The shoes are riveted to the bottom flange cover plates and project about 2 in. beyond them on each side. They are made with heavy metal throughout, thickened in places where the stresses are the greatest. They have a continuous semicylindrical bearing for the 3-in. pin nearly as long as the width of the girder flange, beyond which there are open spaces and then full hole bearings through the side webs of the shoe. The center bearing is stiffened with longitudinal webs and has a solid connection to the top plate. The pedestal is made wider than the shoe to give an increased length of rollers, and has a continuous semi-cylindrical pin bearing which is integral with the thick base plate, and has side webs engaging with clearance the notches between the shoe

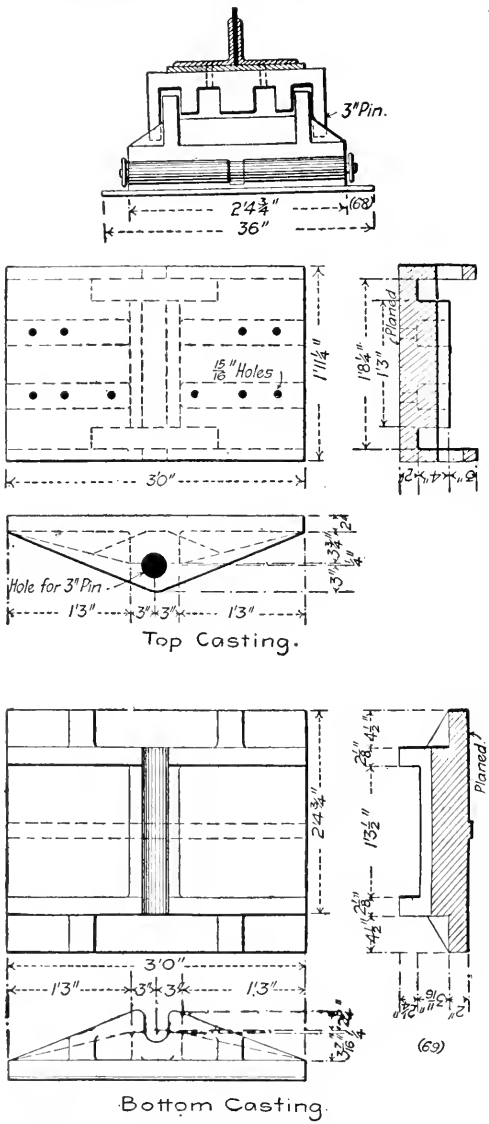

Bridge No. 7, Bradford Division, Erie R. R.

webs. The pedestal rests on ten $3\frac{1}{8}$ in. rollers 29 in. long, with center grooves to engage guide strips on the pedestal base, and on the riveted steel bed plate. The fixed end bearings correspond to these, except that the pedestals are made $4\frac{1}{2}$ in. higher and are seated directly on the pier masonry.

Lebanon Valley. — The double-track through plate-girder span of the Lebanon Valley crossing of the Reading Belt Branch

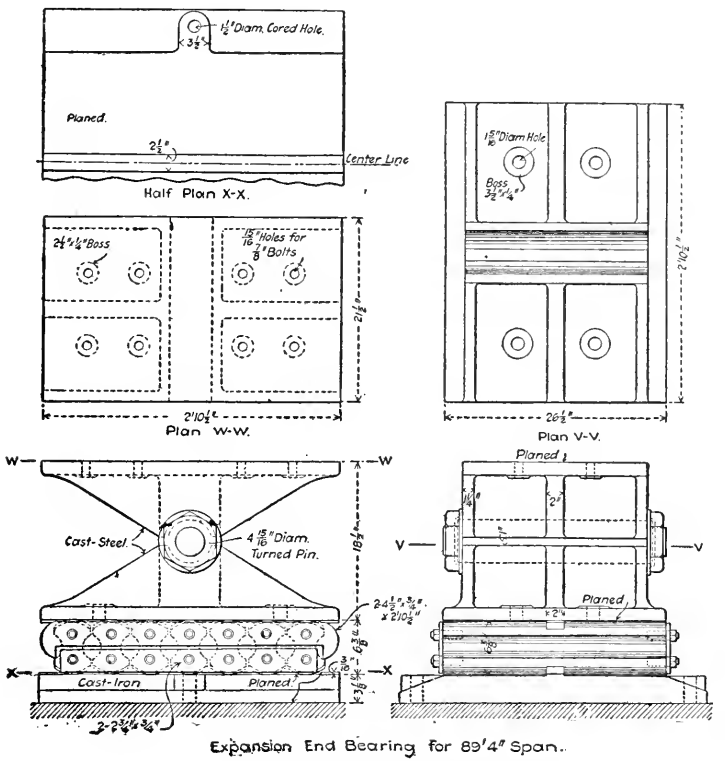

Lebanon Valley Bridge, P. & R. R. R.

of the Philadelphia & Reading Railroad has girders 83 ft. 9 in. long and 9 ft. $4\frac{1}{2}$ in. deep over all, with 18-in. flange cover plates. Sole plates $32 \times 11 - 16 \times 48$ in. are riveted to the ends of the lower flange plates and are stiffened by vertical transverse webs. These plates take bearing on concentric cast-steel shoes with $21\frac{1}{2} \times 34\frac{1}{2}$-in. top plates bolted to them. They have continuous half-hole bearings $21\frac{1}{2}$ in. long, stiffened by three transverse webs, and engaging $4\frac{15}{16}$ — 16-in. pins seated in corre-

sponding pedestals. The pins have shouldered ends threaded to fit chambered nuts, which, with the washers, lock the shoe and pedestal together.

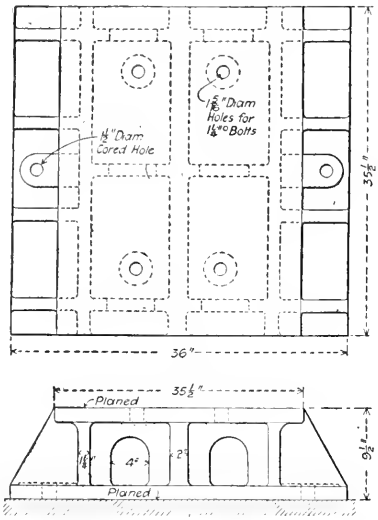

Fixed End Bearing for 89'4" Span

Lebanon Valley Bridge, P. & R. R. R.

The expansion end pedestals have longitudinal center ribs on the planed bases, which engage grooves in the centers of a nest of seven $6\frac{3}{4}$ in. segmental rollers. Each roller is connected by a pair of tap bolts in each end to two side bars with $\frac{3}{4}$-in. clearances between the square ends of the lower ones and the hooked ends of the upper ones. This device limits the angular displacement of the rollers, which are seated on a $36 \times 36\frac{1}{2} \times 3\frac{1}{8}$-in. cast-iron bed plate with the longitudinal edges beveled on the upper side and cored for two $1\frac{1}{4}$-in. anchor bolts which clear the rollers, shoe, and pedestal and engage the sole plate. At the fixed end, the rollers and bed plates are replaced by a cast-iron bolster, having a height equal to their combined heights. It is made with planed top and bottom plates, three transverse and three longitudinal $1\frac{1}{4}$-in. vertical webs, and bracing ribs for the outside webs. It is anchored to the masonry by two bolts through $1\frac{1}{2}$-in. cored holes, and is secured to the pedestal by four $1\frac{1}{4}$ in. bolts through drilled holes.

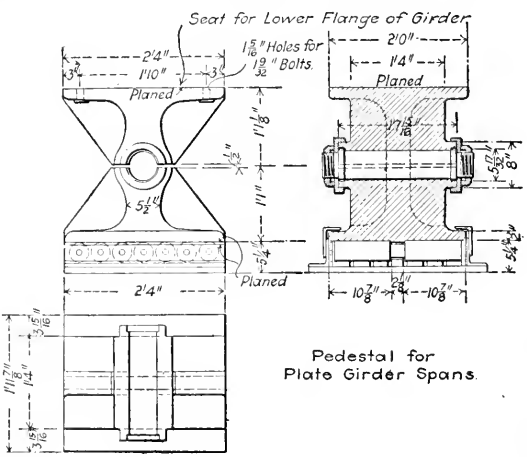

Pedestal for Plate Girder Spans.

Clairton Bridge.

Clairton. — The double track through and deck girders of the approaches to the Clairton bridge over the Monongahela River have spans of from 86 to 117 ft., all of which have pin bearings.

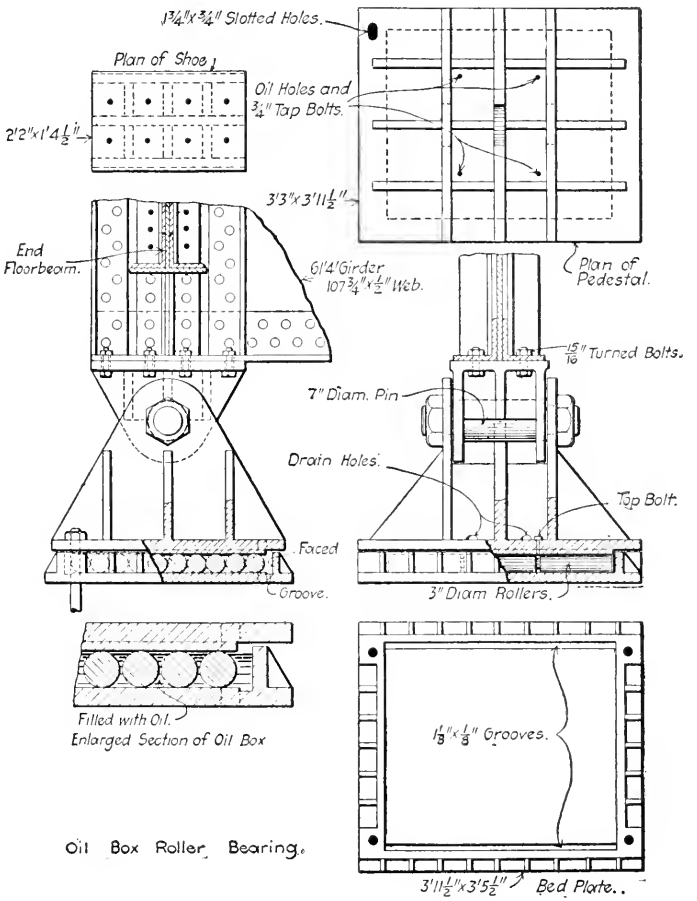

Omaha Bridge, O. B. & T. Ry.

The shoes are bolted to the lower flanges, and consist of steel castings having thick transverse and longitudinal webs with half-hole bearings on the 5-in. pins, which engage corresponding pedestals and are locked in place by shoulders and recessed discs engaging bosses in the faces of the castings. At the expansion end of the bridge the pedestal is seated on a nest of seven $3\frac{1}{2}$ in. rollers, which are centered by the usual guide ribs. The rollers are set on a 28 × 31-in. bed plate having pairs of angles on

both sides, which form Z-shaped guides inclosing both rollers and pedestal flange so as to exclude dirt. At the fixed end of the bridge the pedestal is made 5 in. higher than that at the expansion end so as to allow for the thickness of rollers and bed plate, and is seated directly on the masonry which is built to the same height in both cases. At both bearings there is a clearance of $\frac{1}{2}$ in. between the shoe and pedestal to allow for possible deflection in the girder.

East Omaha. — The Omaha Bridge & Terminal Railway Company's double-track bridge across the Missouri River, at East Omaha, Neb., has nine plate-girder spans about 61 ft. long. All the girders have both ends supported on 7-in. pin bearings fixed at one end and movable at the other end. At both ends there are bolted to the bottom flange angles duplicate cast-steel shoes with three longitudinal webs stiffened by three transverse webs. The pin has full-hole bearings in the outside webs, a half-hole bearing in the center web, and a full-length narrow bearing on the upper edge of the center transverse web. The pedestal is similar to the shoe except that the pin has no bearing on the center transverse web, and that the outer surface of the baseplate is planed and has a depression $3\frac{1}{2}$ and $4\frac{1}{2}$ in. wide around all the edges, so as to concentrate the bearing on the center part and allow the edges to clear the rollers.

The pedestal is seated on a nest of nine 3-in. rollers $38\frac{3}{4}$ in. long with $2\frac{1}{2} \times \frac{1}{2}$-in. end bars, in which their shouldered ends are inserted. The rollers have no guide bars, but are set in a shallow rectangular cast-steel pan with sides planed on the upper edges $3\frac{15}{32}$ in. above the planed upper surface of the bottom plate on which the rollers bear. These dimensions give $\frac{1}{32}$ in. clearance between the tops of the sides and the edges of the pedestal base, and the former securely inclose the roller nest and protect it from dust and dirt. Four $\frac{3}{4}$-in. holes are drilled through the bottom of the pedestal, and through them the roller pan is filled with oil, the rollers being grooved in the lines of the holes to provide oil channels. The oil holes are closed by tap bolts, and the pedestals are secured against transverse displacement by anchor bolts passing through slotted holes in them and through round holes in the roller pans.

Baltimore & Ohio R. R. — The expansion end bearings of long girders of the Baltimore & Ohio Railroad, have full-length half-hole pin bearings in cast-steel shoes and pedestals. The shoes are the same width as the girder flanges and are bolted to

them and have three longitudinal reinforcing webs. The pedestals have much larger bases than the shoes and have no center longitudinal web, but the center transverse web is continued past the side longitudinal webs. The pedestal is seated on a nest of 4-in. cylindrical rollers with a cast-steel ribbed bed plate, and is secured by anchor bolts through the bases of cast-steel side clamps, Z-shape in transverse vertical section, which clear the bed plates and engage the pedestal bases with their top flanges.

Chicago, Milwaukee & St. Paul R. R. Standards. — The present standards of the Chicago, Milwaukee & St. Paul Railroad for long span girders provides triple-web cast-steel shoes and pedestals with full holes through the side webs which clear each other, and half holes in the center webs in the same plane. The longitudinal webs are connected by two transverse webs, and the shoes and pedestals closely resemble the ordinary riveted designs. At the fixed end the pedestal is seated on a cast-steel bolster, and at the expansion end on segmental rollers with a rail bed.

Northern Pacific R. R. Standard. — On the Northern Pacific Railroad 70-ft. span girders of the standard of 1896 have cast-iron shoes and pedestals resembling in side elevation, those of the Erie Railroad illustrated on page 161. At the expansion ends, the pedestals are seated on rollers and roller beds, and at the fixed ends, on cast-iron bolsters with longitudinal and transverse webs, and a height to compensate for the rollers and beds at the opposite end and allow the masonry seats to be at the same level for both.

Erie R. R Standard. — On the Erie Railroad, standard pin bearings are used for long-span plate girders or where much deflection is to be apprehended. They have cast-steel shoes and pedestals corresponding exactly to those described for the expansion ends, except that the pedestals rest directly on the masonry and have unplaned bases without guide strips. They are proportionately higher than those at the expansion ends, so as to compensate for the omission of rollers and bed plates and fit masonry seats at the same level.

CHAPTER XIX

PIN BEARINGS IN RIVETED EXPANSION SHOES

PIN bearings in riveted expansion shoes are essentially like those in cast shoes and are usually adopted for the longest spans. The riveted shoes may be made lighter than the cast shoes, and are less liable to injury from impact. They can be somewhat more easily inclosed and provided with roller protection than cast shoes. If the height is considerable, they are preferable to cast shoes. Like the cast shoes they are made with an upper and a lower piece, the latter being, strictly speaking, a pedestal, and often is practically a reversed shoe. The shoe and pedestal are usually locked together by full pin-hole bearings, which is less often the case with cast shoes. For long-span girders the shoes usually have one longitudinal web in the plane of the girder web, and one near the outer edge of each flange angle. The top plate is always riveted to the girder flange, while it is usually bolted in cast shoes.

Newark. — Plate girders of from 50 to 106-ft. span in the three-track bridge of the Central Railroad of New Jersey, at Newark, N. J., are supported on two abutments and one pier of stone masonry and one intermediate trestle bent. The girders in the center span vary from about 50 to 70 ft. in length, and have fixed supports with their sole plates bolted to riveted pedestals at both ends. The pedestals are simple boxes with double longitudinal webs, connected by a center transverse web and having their flange angles which connect them to the cap and base plates turned inwards, so that they require a minimum transverse clearance. The eight girders in the two end spans of different skews are all 98 ft. and 109½ ft. long over all and have sole plates riveted at each end to triple-web riveted shoes engaging 6-in. pins through corresponding pedestals. The pedestal and shoe webs are all in the same planes and all have half-hole bearings, except that one plate in each outside web has a full hole so as to lock the shoe and pedestal together, the full-hole plates being staggered on opposite sides of the corresponding shoe and pedestal webs so as to clear, and making the transverse vertical

section of the joint between the shoe and pedestal Z-shape. The expansion end pedestals are seated on nests of eight 4-in. rollers with center grooves to engage guide strips, and their base plates are secured by four anchor bolts through slotted holes. The sole plates project several inches beyond the edges of the

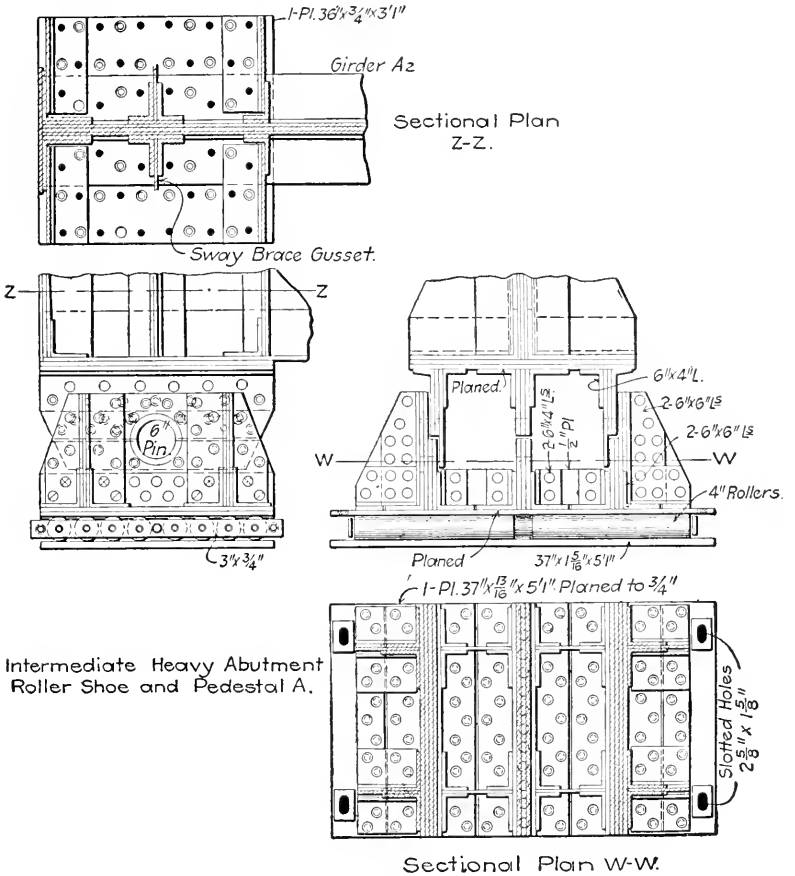

Newark Bridge, C. R. R. of New Jersey.

bottom flange angles and are stiffened at each end by transverse gusset plates riveted to the vertical web-stiffener angles. The pedestal webs are stiffened by two lines of transverse diaphragms and outside gusset plates.

Mingo. — Several 80-ft. deck plate girders in the approach of the Mingo bridge over the Ohio River are braced together

in pairs and double pairs to form single and double-track spans, and have triple-web riveted shoes field-riveted to the lower flanges at both ends. These shoes engage 4-in. pins, which lock them to the pedestals of corresponding design. In both shoes and pedestals the center webs have half-hole bearings and the side webs have half-hole bearings in the angles and full bearings in the plates, which project so as to form jaws and lock both

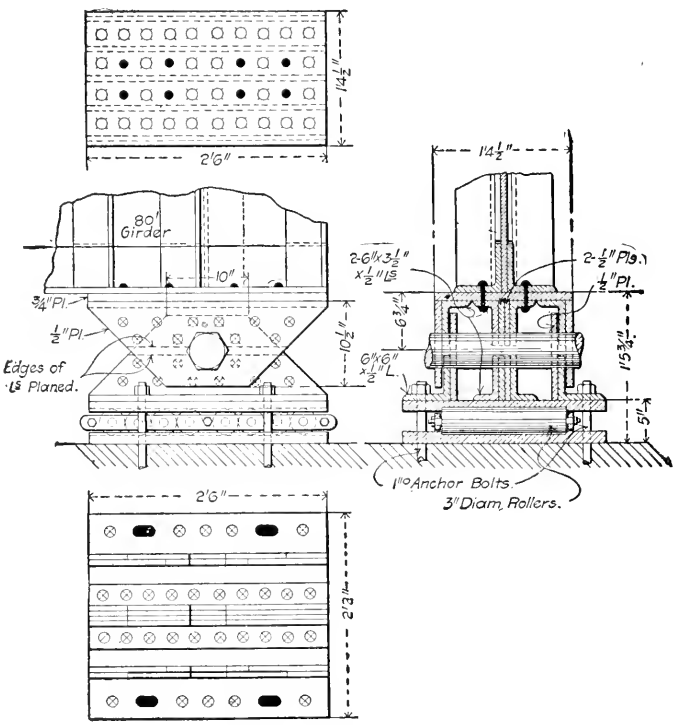

Mingo Bridge.

members together. The side connection angles are arranged with their horizontal flanges in reverse directions in the shoes and in the pedestals, so as to give the latter extended bases and allow the anchor bolts through them to clear the rollers.

At the expansion ends the pedestals are seated on nests of eight 3-in. rollers. These rollers differ from the ordinary pattern in that their sides are perfectly straight without any notch to engage the center guide rib generally riveted to the top and bottom plates. The base plate of each pedestal has longitudinal

guide ribs on both edges, and the bed plate for the roller has a pair of corresponding guide ribs, all of which have planed edges engaging the ends of the rollers so as to keep them in position. At the fixed ends of the spans the pedestals are seated directly on granite blocks, which are bedded in the tops of the piers and abutments, the heights being varied to correspond with the differences involved by the expansion rollers. The capstones are set with great accuracy and grouted with cement to secure satisfactory bearing.

Clyde River. — The four-track bridge of the New York Central & Hudson River Railroad near Lyons, N. Y., has two skew spans with three 110-ft. plate girders in each. The center girders are proportioned for two maximum train loads and have end shears of 499,000 lbs. live load and 209,000 lbs. dead load, which are transmitted to the masonry piers and abutments through riveted shoes and pedestals with pin bearings 107 ft. 8 in. apart. The triple-web shoes have base plates slightly wider than the horizontal legs of the bottom flange angles to which they are riveted, and the pedestal base plates are made about a foot wider to increase the bearing surface on the masonry to about 4 ft. wide for the outside girders. For the center girders it is increased to about 6 ft. by the interposition of I-beam grillages between the fixed pedestals or the roller nests.

The girder shoe and pedestal at each support are locked together by the 8-in. pin passing through full holes in their jaw plates. The pin bearings are mostly rather less than half holes, having clearances at the center. The upper ones for the girder are $4\frac{1}{2}$ in. long in the center and $1\frac{5}{8}$ in. long at each end. The opposite bearings of the pedestal are $6\frac{1}{2}$ in. long in the center and $4\frac{1}{4}$ in. long at each end. The rollers are the same length as their $\frac{3}{4}$-in. top and bottom bearing plates and have side plates across their ends which are a little wider than the diameter of the rollers and form dust guards to protect the spaces between the rollers. The roller frames fit closely between tranverse guide angles with vertical flanges reaching nearly to the under side of the pedestal base plate, which projects several inches beyond them and receives two anchor bolts on each side.

Maiden Lane. — The $116\frac{1}{2}$-ft. plate girders of the Maiden Lane bridge of the New York Central & Hudson River Railroad, at Albany, have bearings on 8-in. end pins which engage upper and lower riveted shoes.

The upper shoe has a $27 \times \frac{7}{8} \times 36$-in. bearing plate riveted to the lower side of the bottom chord flange, and on each side a double vertical longitudinal pin plate $1\frac{3}{8}$ in. thick as shown in

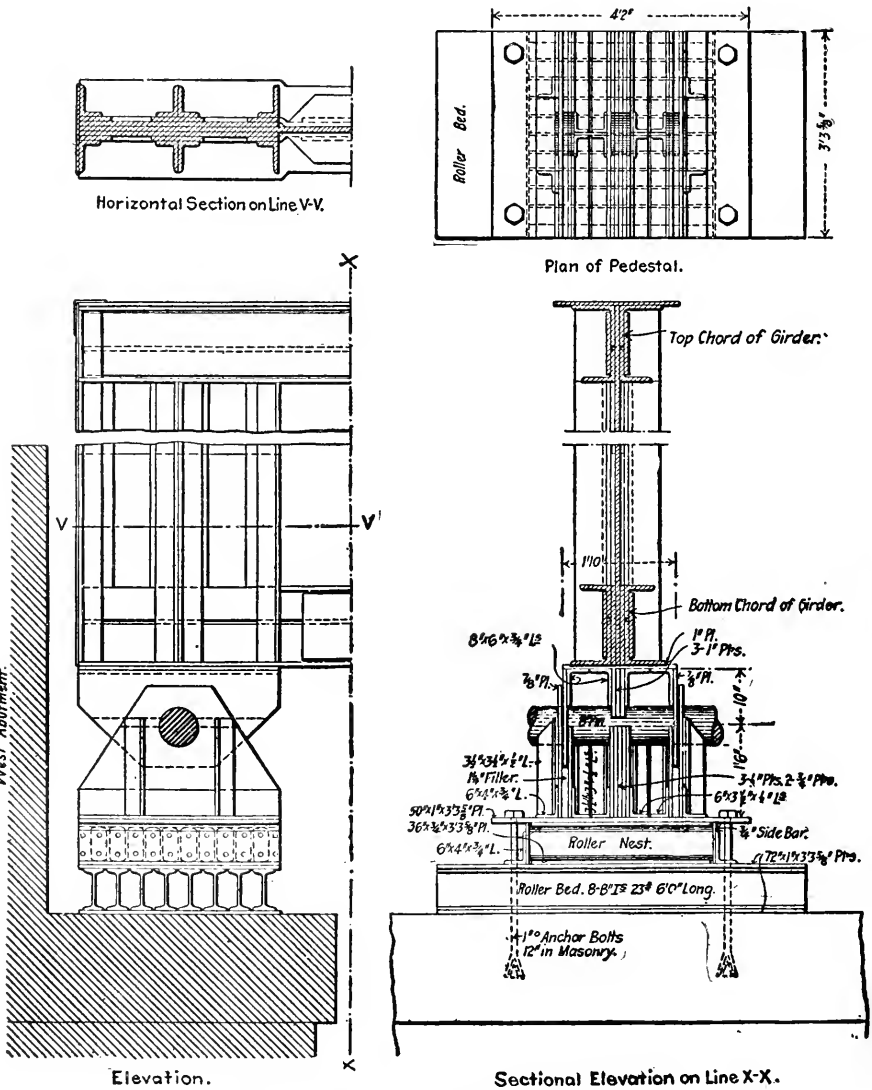

Clyde Bridge, N. Y. C. & H. R. R. R.

the detail. See page 174. These pin plates are connected together by a vertical transverse diaphragm plate and four short 6×6-in. vertical angles, and all are connected to the bearing

plate by two 6 × 4-in. longitudinal and two 6 × 6-in. transverse horizontal bearing angles. The bottom shoe is similar, except that it has a stiffened center longitudinal diaphragm and outside cover pin plates with full instead of half holes. At the fixed end the lower shoe rests on the masonry, and at the expansion end on a nest of ten 3-in. rollers 32 in. long.

Bethlehem Junction. — A single-track through plate girder bridge of 80 ft. clear span carries the Bethlehem spur of the Lehigh and Susquehanna divisions of the Central Railroad of New Jersey over the Lehigh canal at Bethlehem Junction, Pa. The bridge is proportioned for a live load of two 375,000-lb.

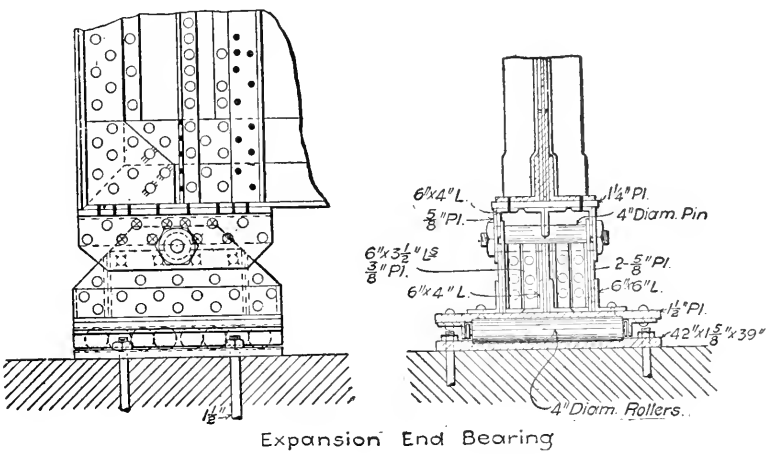

Bethlehem Junction Bridge, C. R. R. of N. J.

locomotives and a 5000-lb. train load, which gives a maximum end shear of 265,500 lbs. in each girder. This is transmitted to the abutment masonry through $4\frac{3}{4}$-in. end pins $84\frac{1}{2}$ ft. apart, which engage shoes riveted to the lower flanges of the girders and pedestals with fixed bearings on one abutment and expansion bearings on the opposite abutment. Both shoes and pedestals have three webs in which the bearings are practically half holes, although the outer plates of each have full holes to lock them together. The webs in the pedestals are connected by vertical transverse diaphragms and the base plates are extended to distribute the load over a larger area of the masonry. The fixed pedestals are seated on rolled steel plates $1\frac{3}{16}$ in. thick and the roller pedestals are seated on nests of 4-in. rollers with

bed plates $1\frac{5}{8}$ in. thick planed down to $1\frac{1}{4}$ in. thick for the bearing, thus leaving outside ribs $\frac{3}{8}$ in. high to serve as guides for the rollers which are not grooved.

Richmond. — The Cincinnati, Richmond & Muncie Railroad

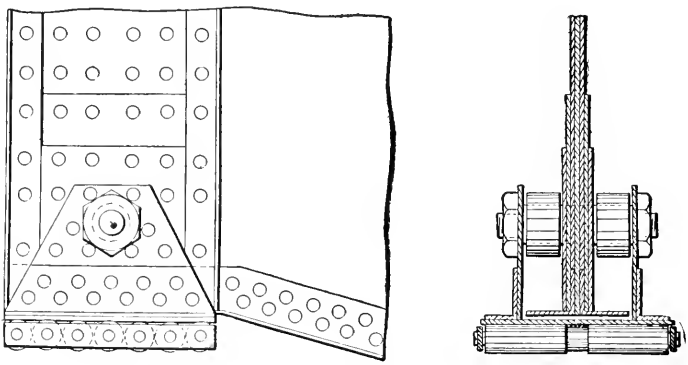

Expansion End Support of Long Span.

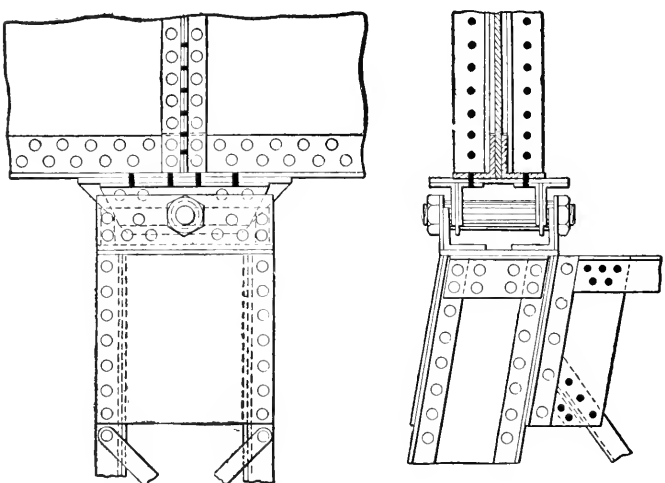

Fixed Pin Bearing for Adjacent Continuous Spans.

Richmond Bridge, C. R. & M. R. R.

crosses the Whitewater River at Richmond, Ind., on a single-track viaduct 688 ft. long, having one 100-ft. deck plate-girder span and several shorter deck plate-girder spans. The 100-ft. span is 10 ft. deep, with the drop ends beveled to a depth of 72 in. to allow it to be seated at the same level as the shallower

girders of the shorter spans. The end panels of the web are reinforced to a total thickness of about 4 in., and have bearings directly on 5-in. pins engaging pedestals like those of an ordinary truss span. The two webs of the shoe are spaced far enough apart to clear the horizontal legs of the lower flange angle without cutting the latter, and the girder web is centrally spaced on the pin by two filler rings. At one end the shoe is seated on a nest of rollers, and at the other end it is bolted to the cap of the tower column.

At the adjacent West Branch Crossing one end of two 60-ft. plate-girder spans is supported on a rocker bent. The ends of the girder abut on the center line of the trestle bent and are riveted together through their end web-stiffener angles. They are seated on an inverted shoe engaging a $3\frac{15}{16}$-in. pin through a pedestal field-riveted to the trestle column cap. In the shoe the most of the pin bearing is on the vertical flanges of the pairs of angles which connect the web plate to the base plate. These angles do not have quite full pin-holes, but the plates do have full holes. The ends of the pedestal web plates are vertical and are connected by transverse vertical plates which inclose the space between the column cap and the girder flange, and exclude most of the dust and moisture which would otherwise collect there.

Worden.— The two double-track 105-ft. through girders of the Cleveland, Cincinnati, Chicago & St. Louis Railroad bridge across the track of the Wabash Railroad at Worden, Ill., have bearings on $6\frac{7}{16}$-in. pins, which engage triple-web pedestals and corresponding shoes riveted to $26 \times \frac{3}{4} \times 30$-in. base plates on the girder flanges. The shoes are alike at both ends and have half holes in the center bearings and full holes in the outside plates of the outside webs. The three webs are reinforced to give a combined length of 9 in. of pin bearing, and are secured to the base plate with 4×4, 6×6, and 5×8-in. angles. The horizontal flanges of the inside and outside web angles are superimposed on each other.

The pedestals correspond to the web shoes except that they have larger base plates and that the outside webs have only single connection angles, the inside angle being omitted. The web plates are exactly opposite those of the shoes and match them, the outside plates only of the outer webs having full pin-holes, and thus locking the shoe and pedestal together with a clearance of $\frac{3}{8}$ in. each side of the pin center. This arrange-

ment reduces the pin stresses to direct compression and eliminates both shear and bending. The 42 × 1 × $\frac{3}{4}$ 43-in. base-plate is planed to a thickness of 1 in. for the full length and for a width of 16$\frac{1}{16}$ in. each side of the center line. This gives an upper bearing for the ten 4-in. rollers 32 in. long between necks, and provides outside longitudinal fins which engage their square ends, retain them in position, and take up transverse stresses without the necessity of the usual center rib and grooves.

The rollers are plain cylinders 4 in. apart on centers, secured

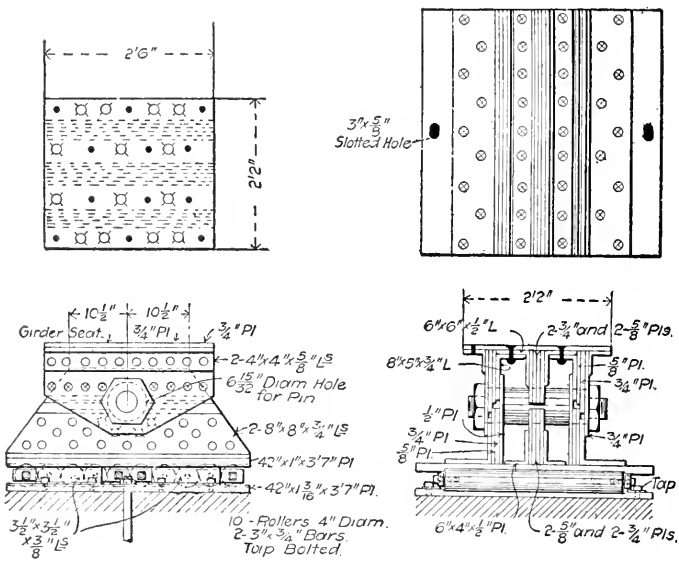

Expansion End Bearing for 102½-Foot Span.

Worden Bridge, C. C. C. & St. L. R. R.

to 3 × 3$\frac{3}{4}$-in. side strips. The two center and two end rollers have square ends with shouldered tap bolts connecting them to the side strips, the intermediate roller necks 1 in. in diameter engaging holes in the side strips. The rollers are seated on a 42 × 43-in. rolled steel bed plate planed out with side ribs to correspond with the pedestal base, and having short side angles tap-bolted to it to engage the roller frame between the tap bolts. The roller shoes have two slotted holes 3 in. long through the base plate outside the roller bearings, to receive the 1$\frac{1}{2}$-in. anchor bolts passing through round holes in the bed plates. The fixed end pedestals are exactly like the roller pedestals, except that

the under sides of their base plates are not planed and that they have round holes for the anchor bolts. They are seated on plain 42 × 1 × 43-in. bed-plates and the difference in the heights of

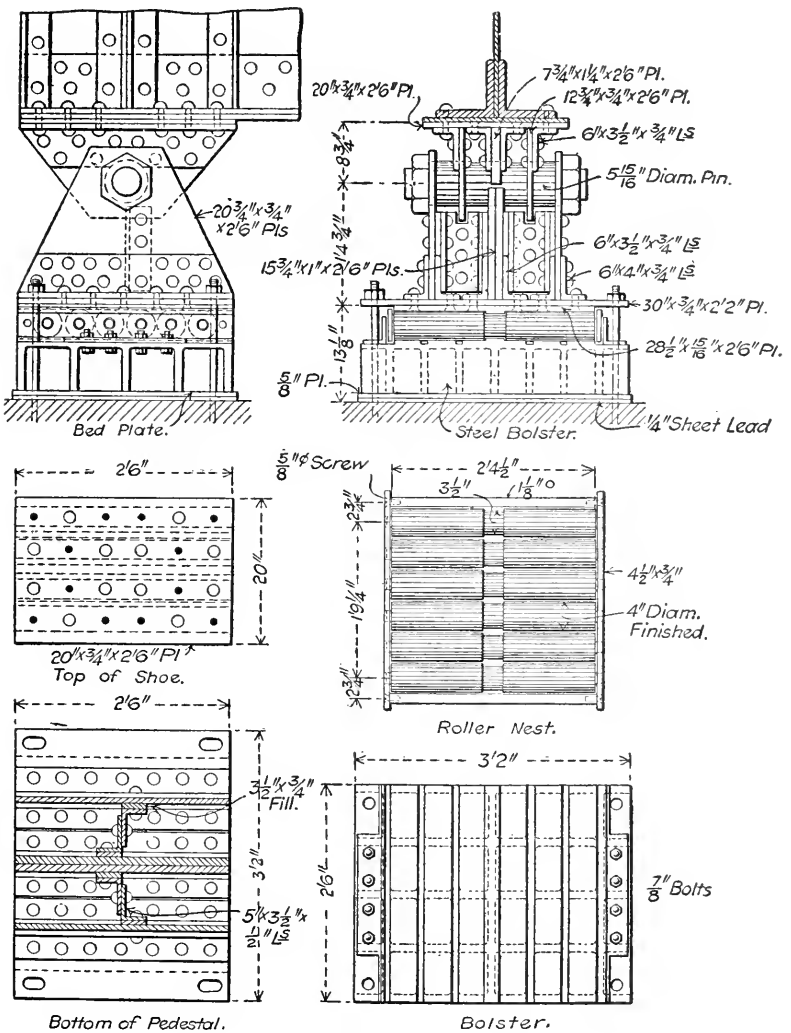

Pine Creek Bridge, N. Y. C. & H. R. R. R.

the bearings due to the omission of the roller nests is made up by building the masonry seats 4 in. higher at this end of the bridge, so as to keep the girders level.

Pine Creek. — The double-track deck skew bridge of the New

York Central & Hudson River Railroad over Pine Creek, Pa., has four lines of 128-ft. plate girders with riveted shoes and pedestals having $5\frac{5}{16}$-in. bearing pins 125 ft. 4 in. apart. The shoes have base plates of the same width as the lower flange cover plate, and have three webs, which together with the angles provide 29.7 sq. in. pin bearing. The center web is in the plane of the center web of the pedestal, and has a half-hole bearing, and the side webs have full hole bearings and clear the pedestal webs.

The pedestal base plate is much wider than that of the shoe, and its webs are thicker, so as to give 29.6 sq. in. pin bearing. Vertical angles are riveted to the webs on the center line of the pedestal with their outstanding flanges in contact and riveted together so as to form Z-shape transverse diaphragms connecting the webs, and slotted at the top to clear the side webs of the shoe. At the expansion ends the pedestals are seated on 158 lin. in. of 4-in. rollers with shouldered ends engaging $4\frac{1}{2}$-in. end strips, which engage the planed edges of the roller plates and bolster beds, and form tight sliding joints to exclude dust. Outside the end strips horizontal guard angles are bolted to the tops of the bolsters to form additional security for the dust guard.

The rollers rest on a cast-steel bolster with top plate and longitudinal and transverse vertical webs about 4 and 6 in. apart. It has no bottom plate, but the lower edges of the vertical webs are planed and are seated on a $\frac{7}{8}$-in. rolled steel bottom plate, between which and the masonry a sheet of soft lead $\frac{1}{4}$ in. thick is interposed to prevent irregularities of bearing in the 1084 sq. in. of surface. On the piers the bottom plates and lead sheets are each made long enough to receive the two adjacent bolsters. At the expansion bearings the top of the masonry is 13 ft. $9\frac{1}{2}$ in. below the rail base, and at the fixed bearings it is $5\frac{1}{4}$ in. higher, to compensate for the omission of rollers and roller plates.

City Island. — City Island bridge, New York, is a highway structure with several 80-ft. through plate-girder spans. The webs of adjacent spans are riveted together, so that they expand and contract together, and there are only two sets of expansion bearings which are accordingly designed to provide for the accumulated increments of temperature displacement. Shoes made of horizontal plates and pairs of wide angles with their vertical legs reinforced, are riveted to the bottom flanges of the girders and are connected by $4\frac{1}{2}$-in. bearing pins, with the pedestals, which are of similar construction except that their

vertical webs are made with two angles, back to back and far enough apart to receive between their vertical legs those of the shoes, thus practically eliminating bending stress in the pin. The shoe angles and the inner angles of the pedestals have half-hole bearings for the pins, but the pin plates and the outer pedestal angles have full-hole bearings, thus locking the members together. The pedestals are seated on roller nests with side

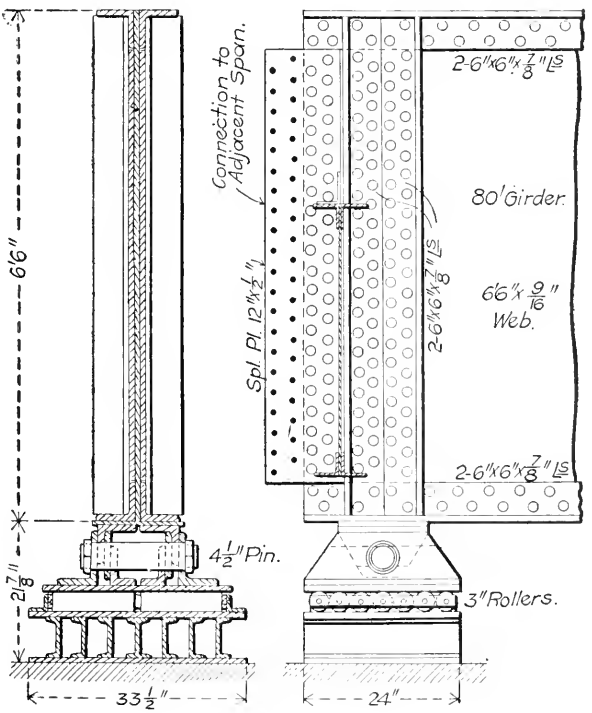

City Island Highway Bridge.

plates which just clear longitudinal angles riveted to the roller bed. This is a grillage made with beams and channels riveted between 24 × 33½-in. top and bottom cover plates, which distribute the girder loads over an increased surface of the masonry.

Riverside Drive. — The transverse cantilever girders nearly 100 ft. long which carry part of Riverside Drive, New York, over the tracks of the New York Central & Hudson River Railroad, have fulcrum bearings on 7-in. pins which engage half holes in four-web shoes riveted to the bottom flanges of the gird-

ers and in corresponding pedestals with extended bases which are seated on expansion rollers. The horizontal plates of the shoes are several inches wider than the bottom flanges of the girders, and their projecting edges are stiffened by vertical transverse plates riveted to the bent lower ends of the web-stiffener angles at these points. The pedestal webs are connected by three vertical transverse diaphragms.

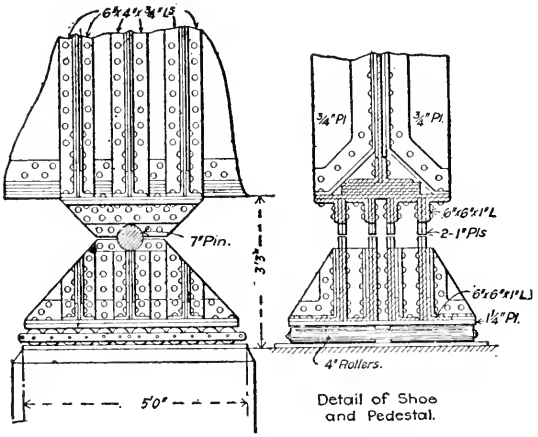

Riverside Drive Highway Bridge.

Union Pacific Railroad. — The riveted shoes and pedestals for 80-ft. deck spans of the Union Pacific Railroad have triple-web riveted shoes and pedestals with the reinforcement plates of the outside webs overlapping to lock them together. The shoes and pedestals are the same length, but the pedestals are about 12 in. wider than the shoes which correspond to the width of the girder flange. The pedestals are seated on five 6-in. cast steel segmental rollers with interlocking end strips.

In 95-ft. spans of the same railroad, the shoe has three webs with full pin-holes and the pedestal has four webs with full pin-holes, the two outside webs being close to those of the shoe, but the two inside webs being about in the middle between the shoe webs. The pedestal is seated on seven 4-in. cylindrical rollers with a bed plate of longitudinal T-rails.

New York Central & Hudson River Railroad Standards. — The present standard designs for the New York Central & Hudson River Railroad long-span girders require triple-web shoes and pedestals mounted on rollers and cast steel bolsters similar to those shown on p. 179, for the Pine Creek bridge, except that the transverse pedestal diaphragm is omitted and the pedestal resembles that shown on p. 190 for bridge No. 454 of the West Shore division. At the fixed ends the bolsters are omitted.

Northern Pacific Railroad Standards. — The 1896 standard

designs for long-span plate girders on the Northern Pacific Railroad provide expansion bearings with triple-web shoes and pedestals of riveted construction resembling those illustrated on p. 192 for the Mingo bridge, except that the ends of the shoes and pedestals are nearly closed by transverse inclined plates riveted to the webs to exclude dirt, and that the pins project several inches beyond the outside webs to give opportunity for lifting them with hydraulic jacks if necessary. Longitudinal angles are riveted to the edges of the pedestal base plates and to the roller bed plate, and their inside vertical flanges are planed to engage the projecting necks of the rollers. They serve as dust guards and as guides for the shoulders of the rollers. The rollers are made without guide slots, and curved transverse plates at both ends of their frames have their upper and lower edges planed to fit the top and bottom plates and complete the rectangular framework which serves as a dust guard.

CHAPTER XX

PIN BEARINGS IN CAST FIXED SHOES

Pin bearings at the fixed ends of girders usually have shoes bolted or riveted to the girder flanges which are nearly or quite duplicates of those at the expansion ends, but the pedestals generally vary on account of the omission of the rollers, and are often made as high as the combined height of the pedestal, roller nest, and roller bed at the opposite end, so that the masonry can be made of exactly the same height at both ends. The pedestals are frequently essentially like the shoes reversed, but often are higher, and have longer and wider bases to secure a larger bearing area and distribute the loads so as to reduce the pressure on the masonry. Cast shoes are usually made with continuous bearings for the pins, which are in the planes of single transverse vertical webs.

Boller & Hodge Standards. — The standard fixed-end bearings adopted by Boller & Hodge for long-span plate girders correspond with those for the expansion ends, and like them are designed in several regular sizes adapted to different loads, so that they will reduce the masonry pressures to a maximum of 250 lbs. per sq. in. The cast steel shoes are comparatively small and are very low and compact. They are proportioned to support the lower flanges of the girders without deformation, and have continuous semi-cylindrical bearings for the 3-in. pins. The pedestals are extended longitudinally and transversely, and are high enough to distribute the pressure at an angle of not more than 45 degrees over a sufficient area of the masonry. The sleeve-like pin bearing is continuously supported on a transverse vertical web, and is braced by oblique equidistant webs radiating to the ends of the pedestal base. The base plate is stiffened by a low vertical flange around all sides, and has a $1\frac{1}{2}$-in. anchorbolt at each corner. The horizontal edges of the pin bearing are faced to give a $\frac{1}{4}$-in. clearance between the shoe and pedestal and allow for a slight displacement due to deflection. The pin is turned with a $\frac{1}{4}$-in. rib $1\frac{1}{8}$ in. wide in the center, which engages a corresponding groove in the shoe and pedestal

and locks them against lateral displacement. The pin nuts are chambered, and engage bosses cast on the shoe and pedestal webs.

Omaha. — The fixed ends of the double-track 61-ft. plate girders of the Missouri River bridge of the Omaha Bridge & Terminal Railway Company at East Omaha, Neb., have pin bearings in cast steel shoes and pedestals similar to those described for the expansion ends. Both shoes and pedestals

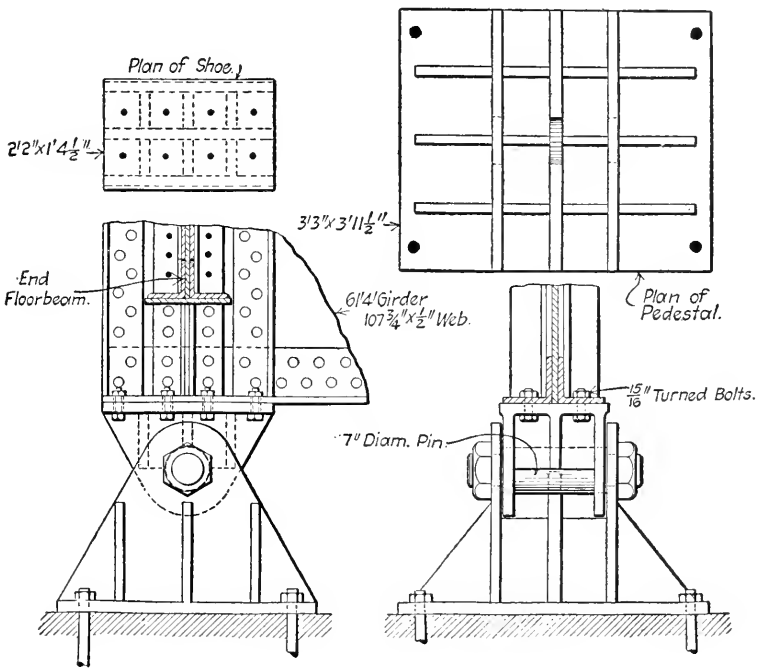

Fixed End Bearing for Skew Deck Spans.

Omaha Bridge.

have three longitudinal and three transverse webs, and the 7-in. pin engages full holes in the outside webs, which clear each other so as to be locked together like pairs of jaws. The pin center is 12 in. below the bottom of the girder flange, but is 2 ft. above the top of the masonry, so as to allow the base of the pedestal to be extended and secure a wide base for the proper distribution of the load on the masonry.

Clairton. — The plate girders in the approaches of the double-track bridge across the Monongahela River at Clairton, Pa.,

have spans from 86 to 117 ft. long, with bearings on 6-in. pins in massive cast steel shoes and pedestals. The fixed-end shoe and pedestal are very nearly alike, except that the cap plate of the former is narrower than the pin bearing, and the base plate of the latter is wider than the pin bearing to extend the bearing surface on the masonry, differing in this respect from the shoe and pedestal at the expansion end, which are of equal width. The continuous half-hole bearings for the pins are supported by

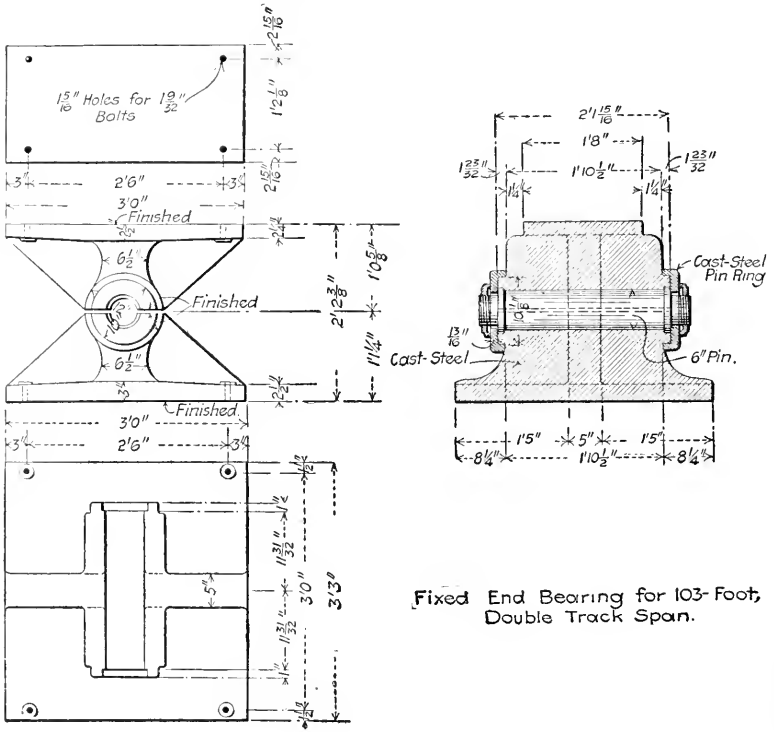

Fixed End Bearing for 103-Foot Double Track Span.

Clairton Bridge.

very thick full-length transverse webs stiffened by thick longitudinal center webs, which help distribute the load on the base plate. Collars are turned on the ends of the pin to fit recesses in the shoe and pedestal and lock them against transverse displacement. Flanged disks engage the ends of the pin and take bearing on its collars and on rings turned on the shoe and pedestal, and are held in place by the chambered pin nuts.

Southwestern Avenue Boulevard. — For the overhead crossing of several railroads across the Southwestern Avenue Boule-

vard, Chicago, there is a nine-track viaduct with 107 through plate girders supported on two abutments and 95 short steel columns.

All girders have 20-in. sole plates, $\frac{7}{8}$ in. thick, riveted to the bottom flanges at both ends. At the fixed bearings these sole plates are seated directly on the column caps, to which they are secured by four $1\frac{1}{4}$-in. turned bolts, except at the abutments, where they rest on cast steel shoes and pedestals providing hinged bearings to allow for deflection and avoid concentrated eccentric pressure on the masonry. Transverse slots are planed in the sole plates to engage ribs on the center lines of the shoes, and the bearing plates of the latter are finished and are bolted to the girders. The shoe has three longitudinal webs and a continuous semi-circular pin bearing, supported by a transverse web. The pedestal is like the shoe reversed, except that the base is enlarged and has extensions on opposite diagonal corners of the base plate to receive $1\frac{3}{4}$-in. anchorbolt holes. The shoe and pedestal are not locked together, but have a $\frac{1}{2}$-in. clearance on the $3\frac{7}{8}$-in. bearing pin. The cast steel in the pin-bearing shoes is required to develop when tested an ultimate tensile strength of 65,000 lbs. per sq. in., elastic limit of 33,000 lbs., elongation of 15 per cent in 2 in., and a reduction of area of 20 per cent at the point of fracture. At the expansion ends of the girders as well as the fixed ends over the columns the sole plates have longitudinal center slots planed in them to engage guide ribs on the bed plates riveted to the tops of the columns. The pedestals are seated on sheets of soft lead interposed between them and the granite coping of the abutment masonry.

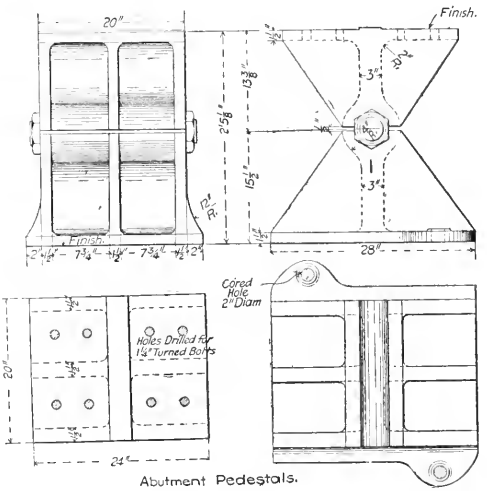

Southwestern Avenue Boulevard Bridge.

Erie Railroad. — On the Erie Railroad cast steel shoes and pedestals have full-length half-hole pin bearings reinforced with three longitudinal webs, those in the center being opposite each

other, and those at the sides clearing each other and having full pin-holes to lock themselves together. The shoes are bolted directly to the girder flanges.

Baltimore & Ohio Railroad. — On the Baltimore & Ohio Railroad the cast steel shoes and pedestals also have half-hole full-length pin bearings. In the shoe the bearing is reinforced by a center web and two side webs, the latter being opposite the pedestal webs. The pedestal has no center longitudinal web, but has a continuous transverse web projecting beyond its longitudinal webs.

CHAPTER XXI

PIN BEARINGS IN RIVETED FIXED SHOES

Riveted pin-bearing shoes at the fixed ends of girders correspond substantially with those at the expansion ends, except that the rollers or rockers are omitted and they are secured rigidly to the pedestals, so that no movement is permitted in the girder. This simplifies the construction of the base by the omission of the guide ribs intended to transmit transverse stress to the rollers. The pedestals are seated directly on the masonry and are often made higher than for the expansion shoes, so as to compensate for the omission of the rollers and conform to masonry of the same height as at the opposite end of the span. In these, as in all other fixed pedestals, the base plate must be proportioned so that its bearing area is large enough to diminish the maximum unit pressure to the working amount allowed on the masonry. This is usually easily done by extending it transversely as far as the bottom web connection angles will stiffen it, and making its longitudinal length any required amount, and stiffening it in that direction by making the web plates reach its full length. If this involves too great a distance for the limits of the bridge seat, a bed must be made for it which will distribute the load transverse to the bridge axis, a construction which is usually secured by making a grillage of transverse I-beams with top and bottom cover plates. Sometimes these grillages are made wide enough to receive also the pedestal of the next span, thus probably covering nearly or quite the full width of the pier top.

Chicago Terminal Transfer Railroad. — The double-track through span of the Chicago Terminal Transfer Railroad across the Illinois & Michigan Canal has a pair of skew plate girders $115\frac{1}{2}$ ft. long and 10 ft. deep, with bearings on $12\frac{1}{2}$-in. pins 114 ft. apart. The pins directly engage the reinforced lower corners of the webs, which are clipped off at an angle of about 30 deg. with the horizontal to clear the base plates of the low riveted shoes. See p. 189. The cast steel pins have a 7-in. hole bored through the axis, and have the diameter reduced to $11\frac{9}{16}$ in. for

the pedestal bearings between narrow projecting rings or collars. The bearing surfaces only are finished. The pedestal is made with six webs connected by transverse plates riveted to connection flanges on the inclined edges so as to form tight covers inclosing the spaces between them on the outer ends and on all of the inner ends except between the two center webs, where space is left for clearance with the girder web.

Bridgeport. — The 105-ft. single-track deck-span girders of the Pennsylvania Railroad Company's bridge at Bridgeport, Ohio, have pin bearings with shoes and pedestals very closely resembling those of the Maiden Lane bridge, except that the webs are not connected by transverse diaphragms (see pp. 175–193). The shoe webs are closer together than the pedestal webs so as to clear them easily, and both are made with 6 × 4-in. connection angles and $\frac{1}{2}$-in. and $\frac{3}{4}$-in. web plates.

Yellow Creek. — The 114-ft. plate girders of the single-track span of the Lake Erie, Alliance & Wheeling Railroad across Yellow Creek in northern Ohio, have bearings on 6-in. pins engaging riveted shoes and pedestals similar to those of the Maiden Lane bridge. The web plates of both members have, however, a slight transverse clearance, and their ends are cut vertical to the horizontal line through the pin center, being connected by transverse vertical plates which entirely inclose the bearings and make the elevations of the latter resemble short square columns (see pp. 175–193). There is only 2 or 3 in. clearance between the shoe webs, both of which and the pedestal webs have full hole bearings for the pin, but are not stiffened by center transverse diaphragms. The pedestal has a center longitudinal web with a half-hole pin bearing, and the pin stresses are reduced to direct shear. The shoes are field-riveted to $\frac{3}{4}$-in. sole plates on the bottom flanges of the girders, and the latter are reinforced by a group of eight vertical web-stiffener angles directly above them.

West Shore Railroad Bridge No. 454. — Bridge No. 454 of the West Shore Division of the New York Central & Hudson River Railroad is a through plate girder span with a center girder 116 ft. long and 7 ft. deep, back to back of angles. It has pin bearings with riveted shoes, pedestals and grillages at both ends, the expansion end differing from the fixed end only by the insertion of a roller nest between the pedestal and the bolster, and by the addition of roller plates and guide ribs above and below the rollers. The triple-web riveted shoe has a planed base plate

field-riveted to the bottom flange of the girder. It is exactly the same width as the flange cover plate, and is concentric with the group of four pairs of vertical web-stiffener angles in the short end panel. The base plate is planed on both sides, and the edges of the web plates and the bearing surface of their flange connection angles are planed to insure perfect bearing. The webs are peculiar in that each of them has two connection flange angles, and as there is not room for the horizontal flanges of all the angles on the base plate, those of the center and side

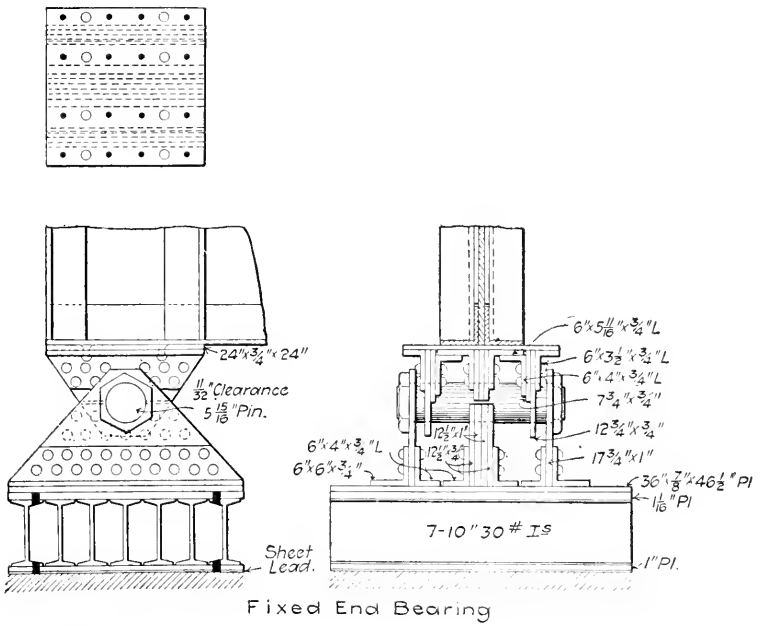

Fixed End Bearing

Bridge No. 454, West Shore Division, N. Y. C. & H. R. R. R.

webs are superimposed and are riveted, two thick, to the base plate between the webs. The outer plates of the side webs have full holes, and all the other web plates have half holes for the $5\frac{15}{16}$-in. pin.

The pedestal is similar to the shoe reversed, except that it is much wider and longer, and the web connection angles are all riveted directly to the base plate. The center web is much thicker than that of the shoe, and with the two outside webs provides a combined length of bearing for the pin of $5\frac{1}{2}$ in. The center webs are in the same plane, but have a vertical clear-

ance of $\frac{1}{4}$ in. each side of the horizontal diameter of the pin, and the outer webs on each side are far enough apart to give clearance for the rivet heads. The base plate extends about 6 in. beyond the flanges of the web connection angles to receive the $1\frac{1}{2}$-in. anchorbolts. The pedestal is seated on a bolster 12 in. high, which has the same width and length as its base plate, and is made with seven horizontal I-beams set as close as

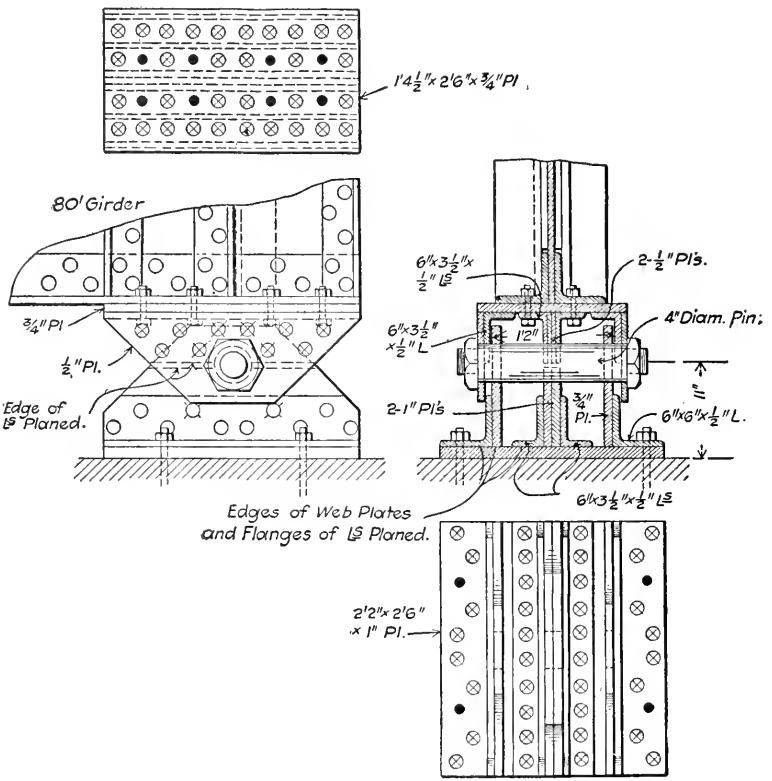

Mingo Bridge.

possible together, transverse to the bridge axis and connected together by top and bottom cover plates countersunk-riveted to their flanges. A sheet of soft lead $\frac{1}{4}$ in. thick is placed between the grillage and the masonry to secure a uniform distribution of pressure on the latter.

Mingo. — The double-track deck plate-girder spans of the Mingo bridge over the Ohio River have bearings on 4-in. pins, which engage full holes in the pedestal and shoe webs, and lock

them together. The shoes are about 5 in. wider than the bottom flanges of the girders, to which they are secured by eight vertical bolts. They have three longitudinal webs: the center one is in the plane of the girder web, and engages the pin with a half-hole bearing. The pedestal is similar to the shoe, except that the connection angles of the outer webs are reversed, and the base plate is extended to a width of 26 in. The pin bears on the flange angles of the shoes, but is clear of

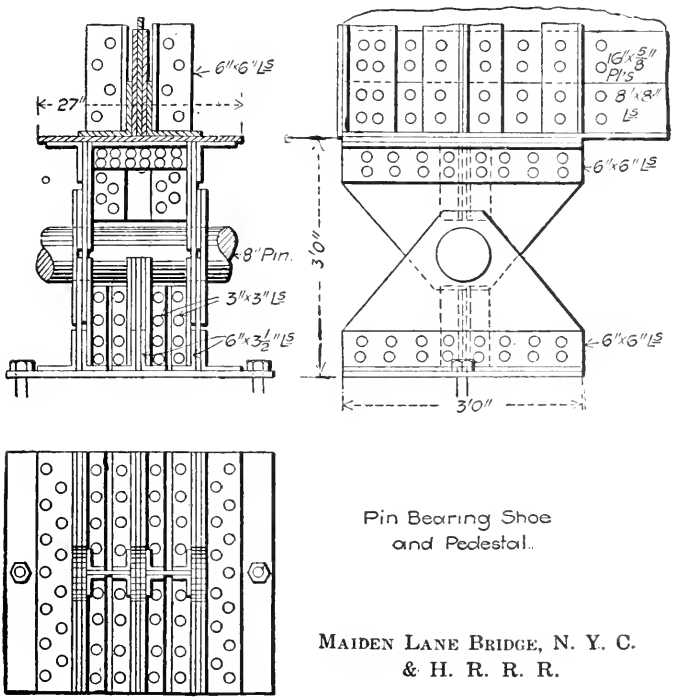

Pin Bearing Shoe and Pedestal.

MAIDEN LANE BRIDGE, N. Y. C. & H. R. R. R.

Maiden Lane Bridge, N. Y. C. & H. R. R. R.

those in the pedestals, and the edges of the center webs are planed to a $\frac{1}{2}$-in. clearance on the horizontal diameter of the pin. The pedestal is set without grouting or lead filler directly on the granite cap stones, which are very carefully dressed and leveled to different heights at the fixed and roller ends. The side webs are made with double reinforcement plates, one of which in each member has a half-hole pin bearing, and the other has a full hole and interlocks with the opposite member.

Maiden Lane. — The 116-ft. plate girders of the double-track

through span of the Maiden Lane bridge of the New York Central & Hudson River Railroad, at Albany, N.Y., have bearings on 8-in. pins, under the centers of groups of end vertical web stiffener angles, which reinforce the short end panels for the heavy maximum shear. The fixed-end shoes have base plates 27 in. wide, riveted to the 18 in. wide bottom flanges. They have two longitudinal webs about 15 in. apart in the clear, each made of three thicknesses of plates. The center plate has a full pin-hole and fits between two of the pedestal web plates, which are fillered apart to form jaws with half holes for the pin. They are in the same plane as the half-hole plates in the shoe webs, and are cut to clear them about $\frac{1}{2}$ in. on the horizontal diameter of the pin. An outside reinforcement plate on each of the two outer pedestal webs has a full hole, and thus the upper and lower webs form double jaws and lock together. The shoe webs are connected by a vertical transverse diaphragm cut to clear the pin. The pedestal corresponds to the shoe, inverted, except that its base plate is extended to 3 ft. in width, and it has heavily reinforced center longitudinal web with a half-hole pin bearing. Each bearing is subject to a maximum computed load of about 507,000 lbs.

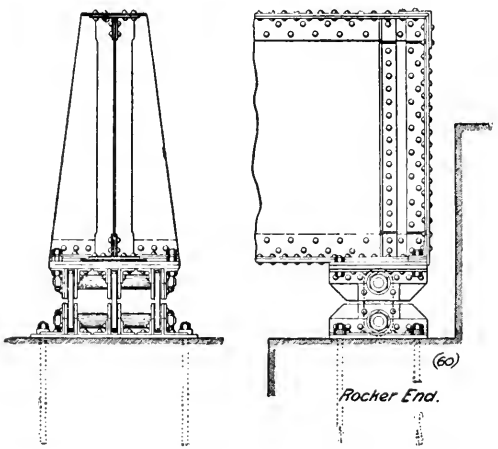

C. M. & St. P. Ry. Bridge.

Chicago, Milwaukee & St. Paul Railway. — The 80-ft. girders in a three-span double-track through bridge of the Chicago, St. Paul & Milwaukee Railway have expansion bearings throughout, except at one abutment where they are fixed, and have pins through special shoes and pedestals. Sole plates, wider than the girder flanges, are stiffened by transverse knee-brace diaphragms riveted to the end vertical web-stiffener angles, and to them are bolted correspondingly wide shoes with three longitudinal webs. The pedestals also have three webs, the outer ones being spaced wider apart than the corresponding ones in

the shoes, so as to clear them. The center pedestal web is double, with sufficient clearance between the vertical plates to receive the center web of the shoe. Both shoe and pedestal are very low, vertically, and the full pin-holes are bored close

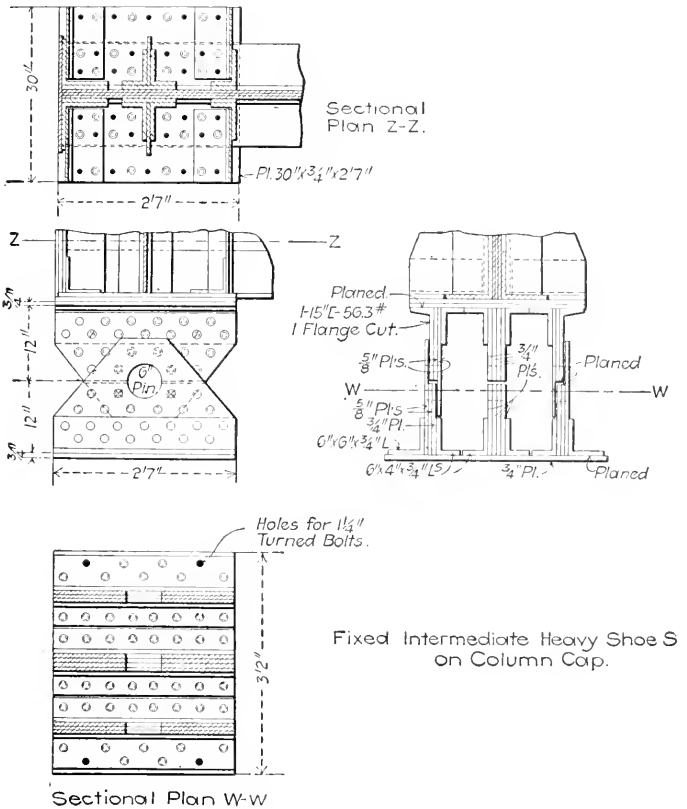

Newark Bridge, C. R. R. of N. J.

to the base plates, so that the girders are elevated the minimum distance above the masonry.

Clyde. — The four-track bridge of the New York Central & Hudson River Railroad over the Clyde River near Lyons, N.Y., has three lines of slightly skewed plate girders over 12 ft. deep, and nearly 111 ft. long over all. The center girder carries the full load from two tracks and weighs 96 tons. The girders meeting on the center pier have fixed bearings there, while the bearings on both abutments are expansion bearings. Both

fixed and expansion bearings are on 8-in. pins 107 ft. 8 in. apart which engage triple-web riveted shoes and pedestals. The fixed-end shoes of adjacent girders in the same line are both connected to a single long pedestal which is seated on a grillage of twelve 8-in. I-beams riveted between top and bottom plates. The shoes closely resemble those of the Mingo bridge (see pp. 171 and 192), and have pin bearings of about 160 deg. and of nearly 8 in. combined length.

Newark. — The 95-ft. and 106½-ft. girders in the shore spans of the three-track bridge of the Central Railroad of New Jersey, N. J., have bearings in riveted shoes and pedestals. The shoes have three longitudinal webs with half-hole bearings for 8-in. pins. The inside plates of the outer webs project beyond the other plates in the same webs to receive full holes, and with the correspondingly projecting outside plates in the outer webs of the pedestals, lock both members together. The center web and the short plates of the side webs are planed to a clearance of about ¼ in. from the horizontal diameter of the pin, and all of them are planed to bear on the base plate. The pedestal is the exact counterpart of the shoe, reversed, except that its base plate is wider. The overlapping side plates and the horizontal clearances of the center plates in each side web give a Z-shape outline to the cross-section of the joint.

City Island. — The 80-ft. through plate girders in the shore spans of the City Island highway bridge, New York, have, at the fixed ends, pin bearings like those described at the expansion ends (see p. 130). They are made with riveted shoes and pedestals connected by a 4½-in. pin, and centered under a double pair of vertical web stiffener angles which practically form an end post receiving the maximum shearing stress. The pedestals are seated directly on grillages made of channels and I-beams riveted between 24 × 33½-in. horizontal cap and base plates. These are made 3 in. higher than the grillages at the expansion ends, so as to compensate for the height of the roller nest, and to maintain the same distance of 21⅞ in. clear between the lower flange of the girder and the top of the masonry.

Union Pacific Railroad. — The fixed ends of long-span plate girder bridges, on the Union Pacific Railroad, have pin bearings in riveted triple-web shoes and pedestals. The shoe and bolster webs are in the same planes, and are locked together by projecting reinforcement plates on the outside webs, which alone have

full holes for the pin. The width of the shoe is the same as that of the girder flange, but that of the pedestal is increased, and its base plate forms the top of a bolster, thus making the pedestal and bolster integral. The bolster is made with pairs of longitudinal channels riveted together, back to back, and its height compensates for the rollers and roller bed at the expansion end.

CHAPTER XXII

DEFLECTION BEARINGS

When girders are supported from their lower flanges, the use of pin bearings involves the use of both shoes and pedestals which require a good deal of machine finishing, are comparatively elaborate and expensive, and often require considerable head room. Smaller, simpler, and less expensive bearings are sometimes sought for ordinary spans, or special connections for viaduct spans are provided with devices which operate as hinges, and concentrate the loads, and transmit it symmetrically to the masonry bearings regardless of the deflection or other distortions of the girders, sometimes even correcting transverse irregularities of position or loading which would require two pins at right angles and an elaborate system of shoes if the latter were employed. Such bearings may be made with cast or riveted details, may be fixed or expansion, may use sole plates, shoes, pedestals, or bed plates, or all of them, and may provide for the deflection with curved bearing surfaces, or with knife-edges, or their equivalents. For short spans, knife-edge or beveled plate bearings can be very cheaply made, and occupy very little vertical height, while probably they maintain symmetrical loading and uniform distribution of pressure on the masonry as well as the pin bearings. In long or very heavy spans, height can be saved by the use of half-pins or their equivalent, which are set very close to the girder flanges, but may be more expensive than pins to make.

Janesville. — The Janesville bridge, on a branch of the Chicago, Milwaukee & St. Paul Railway, has two $114\frac{1}{2}$-ft. deck plate-girder spans, with expansion bearings at their adjacent ends, and fixed bearings on the abutments. The expansion ends of the girders are seated on cast iron supports made in two pieces, one above the other, and separated by a planed phosphor-bronze plate, 8 in. square and $1\frac{1}{2}$ in. thick, on which the girder is free to slide longitudinally, and can deflect without disturbing the pedestal bearings. The upper casting, or shoe, is bolted to the lower flange of the girder, and the lower casting, or bed plate, is

seated without bolts on top of a large webbed cast iron box, or pedestal, which distributes the load on the surface of the masonry. The shoe and bed plate have projecting longitudinal flanges, which inclose the bronze bearing plate, and lock the girder against transverse displacement. The bronze plate is tap-bolted to the bed plate, and the pedestal is anchorbolted to the masonry. The fixed ends of the girders are seated on ordinary cast iron pedestals.

Rockford. — The expansion ends of two 73-ft. plate girders in a bridge, carrying a sidewalk and three tracks of the Chicago & Northwestern Railway across a city street at Rockford, Ill., are supported on cast iron shoes, pedestals, roller nests, and bed

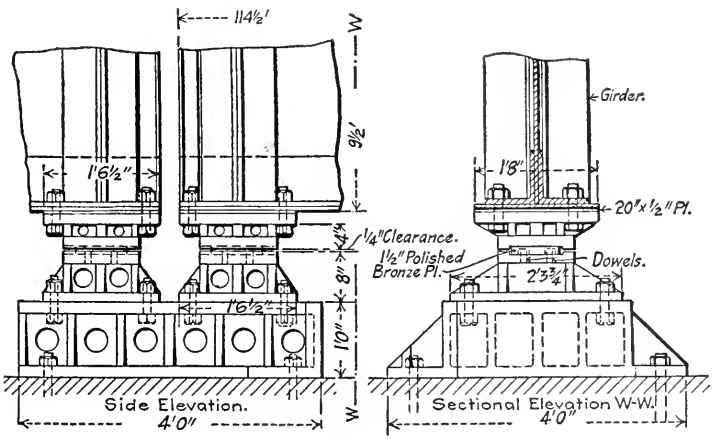

Janesville Bridge, C. M. & St. P. Ry.

plates, like those for the lattice girders, which are parallel to them and form part of the same span. There are two center lattice girders, and two outside plate girders connected by the solid trough floor. Triple-web shoes are bolted to the bottom flanges, and have concave segmental finished bearings, engaging the cylindrical upper surfaces of the pedestals. The latter have four longitudinal webs in planes between those of the shoe webs. Eight $2\frac{3}{4}$-in. rollers are set between the pedestal and the bed plate, which is webbed on the under side, and has no base flange, but is seated on a cement filling, which gives it bearing under all the vertical webs and on the bottom of the top plate. The anchorbolts engage both bed plate and pedestal, and pass through slotted holes in the latter. The rollers are grooved to

engage center guide ribs in the planed bearing surfaces of both pedestal and bed plate. There are cast lugs on the upper surface of the bed plate to serve as roller stops, but there is apparently no provision to center the shoe on the pedestal or to prevent transverse displacement between them. The fixed-end bearings for these girders is the same as that for the roller end, except that the rollers are omitted, and the pedestal is seated directly on the base plate, and the latter is $2\frac{3}{4}$ in. higher to compensate, and keep the abutment masonry seats at the same level.

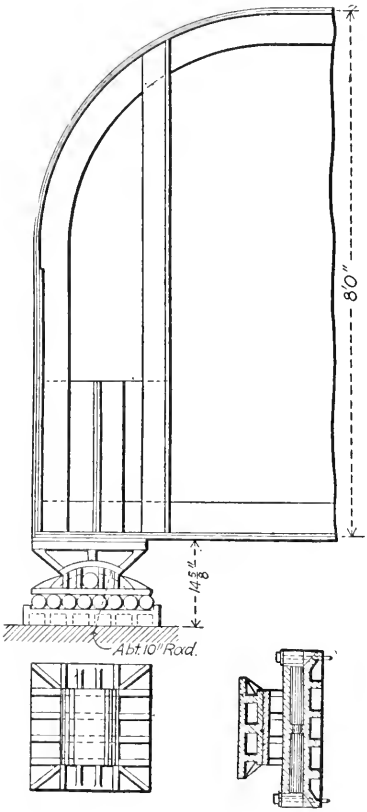

Rockford Bridge, C. & N. W. Ry.

Des Moines. — The $37\frac{1}{2}$-ft. plate girders at the end of the Des Moines River viaduct are supported at the abutments on cast steel pedestals which provide a narrow bearing designed to allow for the girder deflection without producing any change in the distribution of the load over an extended masonry surface. The lower flanges have planed $\frac{1}{2}$-in. sole plates and unplaned $\frac{5}{16}$-in. bottom plates, both of which have a narrow transverse slot to engage a projection on the upper side of the pedestal. The pedestal has a vertical transverse center web, 2 in. thick and $6\frac{3}{8}$ in. high, which takes bearing on the bottom plate, and has a center projection $1\frac{1}{4}$ in. high. This projection enters the slot in the sole plate, and locks the girder against longitudinal or transverse motion, while it permits a slight angular displacement vertically to correspond with deflections. The pedestal web is braced by five longitudinal webs to the 22 × 22-in. base plate. The anchorbolts engage the bottom plate on the girder flange, but do not engage the $\frac{1}{2}$-in. sole plate, which really terminates at the edges of the flange angles, although the engraving erroneously shows it the same width as the bottom plate.

Boone. — The double-track Boone viaduct carries the Chicago & Northwestern Railway across the Des Moines River, and has twenty-one 75-ft. plate girder spans supported on thirty towers. The longitudinal tower girders are seated directly on the tower caps and on the double-web transverse girders, and overhang the column centers nearly 3 ft. These cantilever ends are notched nearly on the center line, and the lower part of the web is heavily reinforced and provided with horizontal angles, form-

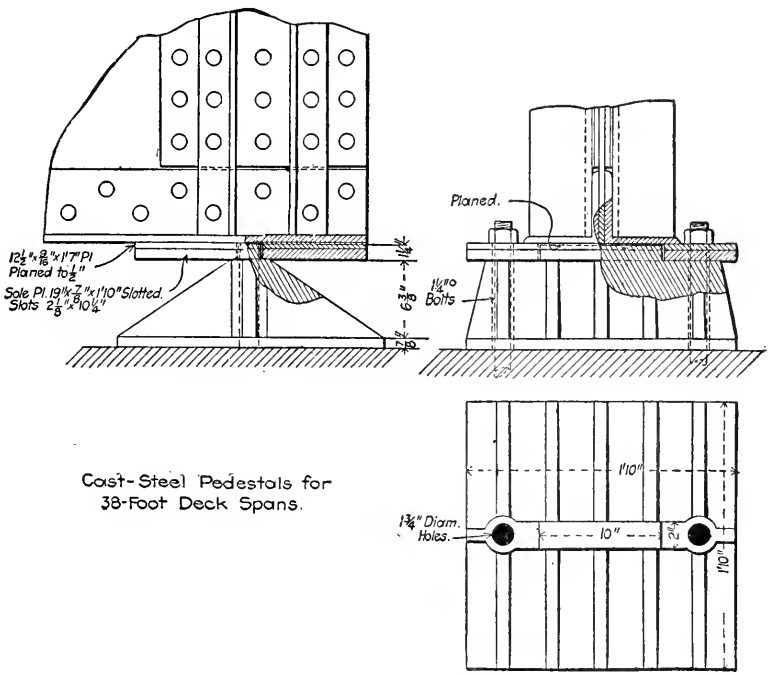

Cast-Steel Pedestals for 38-Foot Deck Spans.

Des Moines River Viaduct.

ing a seat for the connecting girders. These are the same depth as the tower girders, and have reverse notches to make drop ends seated on the cantilevers, allowing the top and bottom flanges of both spans to be in the same planes. A convex cast steel bearing-plate is riveted to the tower girder, and engages transverse and longitudinal vertical guide flanges riveted to the connecting girder to secure it against lateral and longitudinal motion.

Vernon Avenue. — The through plate girder spans of the Vernon Avenue, city highway bridge, Greater New York, have their

expansion ends supported on cast iron shoes and roller pedestals which are connected together by transverse horizontal steel keys. These are of unusual design resembling those sometimes used abroad, and have U-shape cross-sections, with a flat bottom surface, and vertical sides fitting tightly in a rectangular groove in

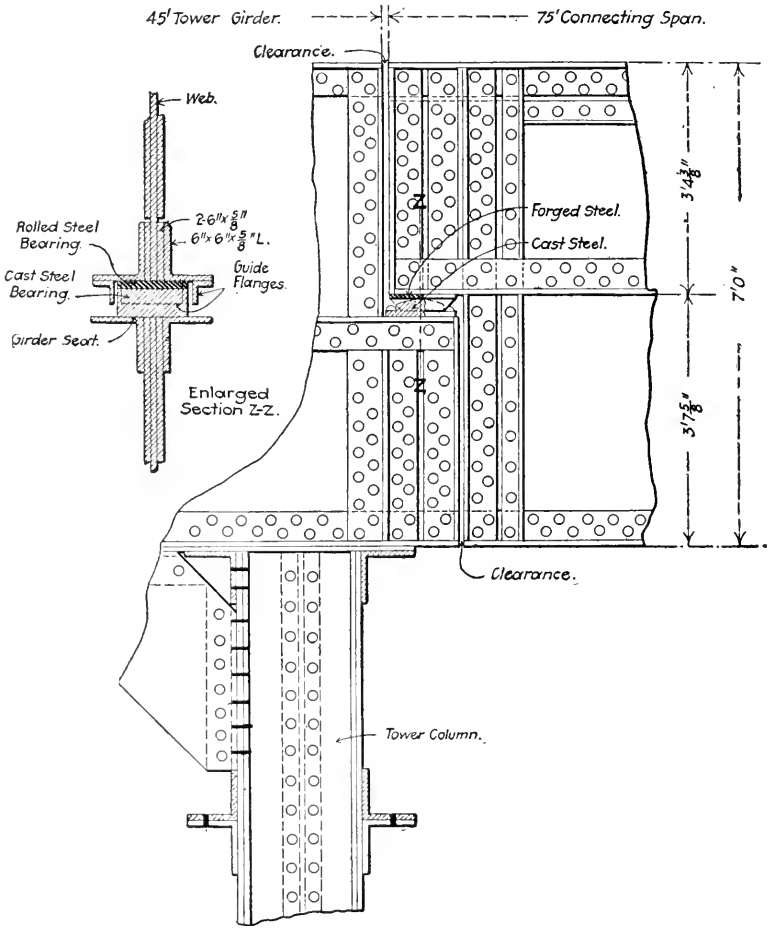

Boone Viaduct, C. & N. W. Ry.

the upper part of the pedestal. The convex upper side of the key engages a circular half-hole bearing in the shoe, and forms a pivot on which the girder can deflect without producing eccentric loading on the abutment or pier seat.

Chicago Great Western Railway. — Plate girders on the Chicago Great Western Railway have sole plates riveted to their

lower flanges and slotted transversely to engage ribs on the upper surface of cast iron pedestals which distribute the load over an increased masonry area and still concentrate the bearing concentrically when the girder is deflected. The pedestals have several heavy longitudinal vertical webs, united by a single transverse web on the center line, and for short spans are seated on masonry plates with anchorbolts through round holes at the fixed ends and through slotted holes at the expansion ends. For long spans the pedestals have guide ribs and are seated on cylindrical rollers inclosed with end and side strips at the expansion ends.

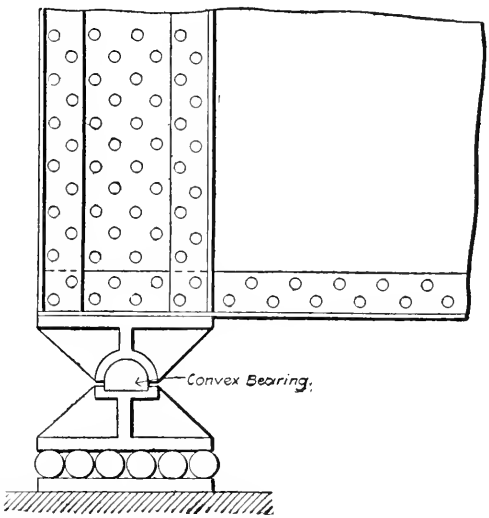

Vernon Avenue Highway Bridge.

Northern Pacific Railway. — Girders of 50 to 65-ft. span on the Northern Pacific Railway have cast steel shoes bolted to the lower flanges with concave bearings on transverse cylindrical surfaces of low cast steel pedestals. The shoes engage all four sides of the pedestal tops so as to lock them in position and permit deflection and still transmit transverse stresses to the masonry through lateral guide strips on the bed plates which engage both sides of the loose pedestals.

Wabash Railroad. — Long-span girders on the Wabash Railroad have cast steel solid shoes with transverse semi-cylindrical bearings engaging concave sockets in high pedestals which distribute the loads over increased masonry surfaces. The pedestals engage the ends of the shoe bearings and lock them firmly in position. They have both longitudinal and transverse webs, and at the expansion ends are seated on nests of cylindrical rollers and anchored by cast steel clamps with Z-shape vertical transverse sections.

Canadian Pacific Railroad Standard. — Long-span girders on the Canadian Pacific Railroad have spherical bearings designed to allow for deflections or for irregularities in the bridge seats and provide for accurate supports of the girder and uniform distribu-

tion of the loads on the bed plates. A thick sole plate riveted to the bottom flange is bored to receive the convex spherical upper surface of a cast steel disk 15 in. or more in diameter and $2\frac{1}{2}$ in. or more in thickness. The flat under side of the disk is set on a thin sheet of lead in a shallow cylindrical hole cut in the top of a bed plate which for long spans forms the cap of a distributing pedestal. At the fixed end the pedestal is seated directly on the substructure, and at the expansion end is seated on a nest of cylindrical rollers with double grooves engaging guide ribs on a bed plate. For long spans elaborate pedestals are made with eight I-beam vertical webs divergent from the center.

Northern Pacific Railroad Standard.—The 1896 standard bearings for plate girders of a length of 70 ft. or more provided ordinary triple-web riveted shoes and pedestals with half-hole pin bearings which engage a pin having a cross-section 4 in. wide and 8 in. high, vertically, with upper and lower side cylindrical surfaces connected by vertical surfaces. These pins act virtually like rockers, and are made to project beyond the outer webs of the shoes so as to afford bearing, if necessary, for jacks to be set underneath and lift the girders.

Atchison, Topeka & Santa Fé Railroad.—All plate girders, up to 106-ft. span, on the Atchison, Topeka & Santa Fé Railroad have bearings on sole plates riveted to the bottom flanges, fixed at one end and sliding at the other end. For spans of 70 ft. or more the sole plates are beveled at both ends to concentrate the bearing on the center third, and they are seated on beds or bolsters made with transverse Z-bars riveted between thick top and bottom plates. The fixed and expansion ends are alike, except for the slotted anchorbolt holes at the expansion ends.

New York Rapid Transit Railroad.—The longitudinal girders in the elevated railroad sections of the New York Rapid Transit Railroad have drop ends overhanging seats on the faces of the transverse girders at expansion ends. The lower edges of the webs have half-hole pin bearings on semi-cylindrical finished steel blocks with their horizontal flat sides seated on the upper edges of the bearing webs of the transverse girders, and locked in position by the projecting flanges of short vertical angles on the ends of the longitudinal girders which act as jaws engaging the bearings. This arrangement is simple and efficient, allowing the girders to deflect without changing the bearings, and to slide freely with temperature changes yet not have any transverse displacement.

CHAPTER XXIII

MISCELLANEOUS BEARINGS

Besides the regular pin, shoe, and pedestal types of bearings and the roller expansions for long spans, there are several modifications combining pin bearings with longitudinal movements and constant application and distributing of loads which in some cases secure more compact construction or economy in manufacture. Both these points have been attained by making the bearings directly in the reinforced web and making the pins engage a pedestal only, thus dispensing with the shoe entirely. For a single girder this form of bearing is obviously deficient in lateral stability, and guides must be provided to resist transverse displacement as can be readily attained when the girder is supported by a steel column in which it may enter. In other cases the transverse bracing with the other girder of the span will provide adequately against tipping. If the pin bearing in the web is made with castings bolted on and reacting against distribution angles, the width of bearing may be much increased, but the connection becomes more elaborate and costly to construct. Web pins suspended by vertical eyebars are more likely to be used for girders supported from steel structures, and are obvious for cantilevers, which, however, are rare in plate girder spans. They may be made so as to require no clearance either above or below the girder flanges, and certainly provide for the minimum of resistance to longitudinal expansion and contraction movements. They do not, however, give solidity corresponding with the prominent idea in plate girder design. Rocker bearings require both a shoe, a pedestal, a short link, and two pins, or their equivalent, but afford a considerable latitude in the elevation and clearance of the girder above its masonry.

Fort Point. — On the Fort Point highway bridge, Boston, Mass., Atlantic Avenue is carried over the yard tracks of the Boston Terminal Company by truss and girder spans seated on masonry piers and steel towers. The three lines of heavy plate girders have pin bearings on fixed and expansion pedestals. A 71-ft. 9-in. girder is about $7\frac{1}{2}$ ft. deep, and has bearings on 6-in.

pins, 69 ft. 7 in. apart, through the web near the lower flange. The web at the pin point is reinforced, and on each side there is riveted a cast steel bearing with a horizontal top flange. The flanges engage the milled lower ends of web-stiffener angles, which distribute the load over about one-third of the depth of the web. The pedestal is an ordinary double-web riveted pedestal

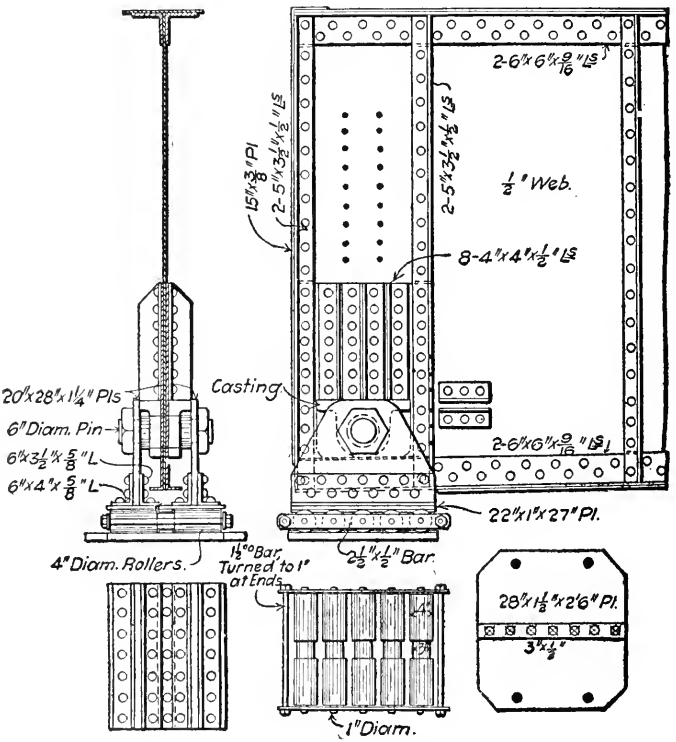

Pier Bearing.

Fort Point Highway Bridge.

like the shoes usually provided for the end pins of truss spans. It is seated on a nest of rollers grooved in the center to engage the guide strips on the base plate of the pedestal and on the bed plate. In this design, although the shoe is nominally dispensed with, the side-bearing castings are virtually equivalent to it, but have the advantage of receiving the load directly from the web where the shear is developed, and avoid subjecting the lower flange to shear. It also permits the girder to

be set several inches lower than it could be with a shoe under the bottom flange.

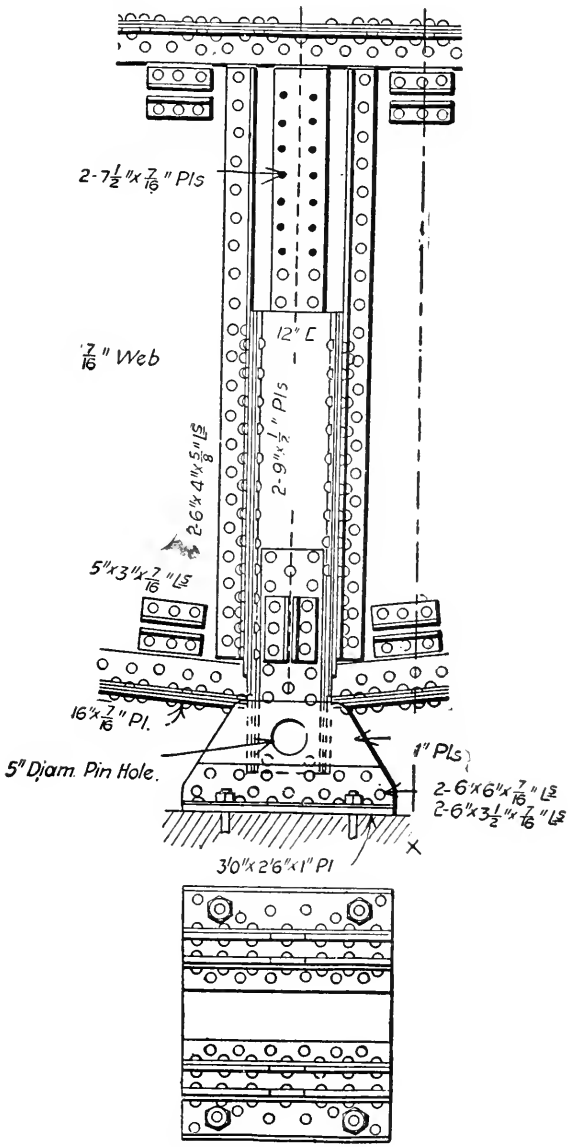

Harvard Highway Bridge.

Harvard. — The 105-ft. 3½-in. double cantilever plate girders of the Harvard bridge, Boston, have pin bearings 75 ft. × 2½ in.

apart on centers. These are made through vertical posts extending a few inches below the bottom flange of the girder and engaging 5-in. pins through the webs of shoes similar to those used for truss spans. Vertical extension plates are riveted to the outstanding flanges of two pairs of vertical web-stiffener angles on opposite sides of the girder web over the pier center. Between these plates are riveted the flanges of vertical 12-in. channels, with their webs parallel to the girder web, and just clearing the bottom flange cover plates. They form jaws for the pin connection and are reinforced by riveted pin plates. This arrangement seats the pin so low and extends the width of the shoe base plate so much that it secures maximum stability for the girder, and at the same time transmits all the bearing pressure directly to the web.

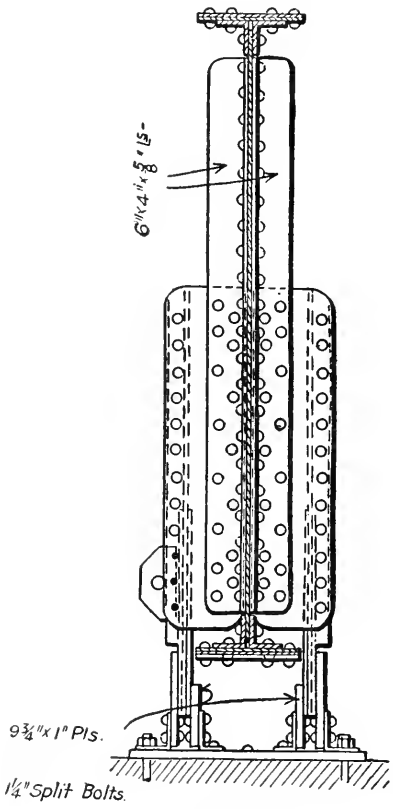

Section X-X.

Harvard Highway Bridge.

Chicago Terminal Transfer Company.— The Chicago Terminal Transfer Company's railroad tracks cross the Illinois and Michigan canal in Chicago, on a double-track through skew bridge with two plate girders $115\frac{1}{2}$ ft. long over all, each of which has a maximum end shear of 475,500 lbs. In the end panels the lower part of the web is reinforced to a total thickness of $5\frac{1}{2}$ in., and bored for main bearing pins $12\frac{1}{2}$ in. diameter. The pins are of cast steel with a diameter reduced to $11\frac{1}{2}$ in., except for the girder web bearing. They are 54 in. long over all, and have a 7-in. hole cored through the axis, and are provided with pairs of ribs engaging the six bearing webs of the pedestals with slight clearances. The pin is turned at bearings, and is left rough elsewhere. The pedestal webs engage the pin with half holes, and are con-

nected together with transverse tie plates inclosing the space below the pin so as to prevent the accumulation of rubbish there. At the expansion end the base plate has a guide

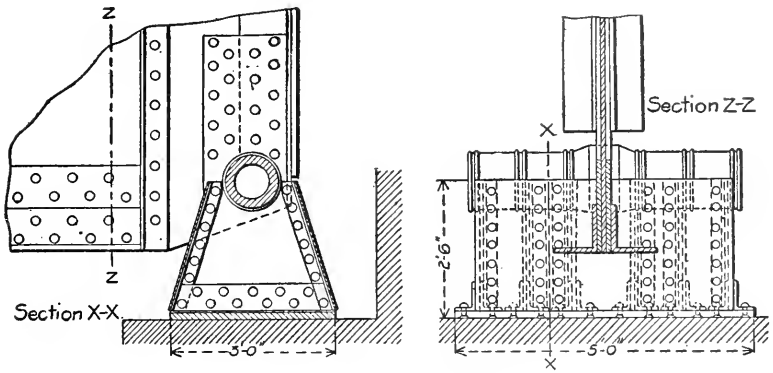

C. T. T. Co. R. R. Bridge.

rib in the center to secure the nest of six $5\frac{7}{8}$-in. rollers which are seated on a cast steel bed plate the upper part of which is cored out to give it a cross-section equivalent to one made by

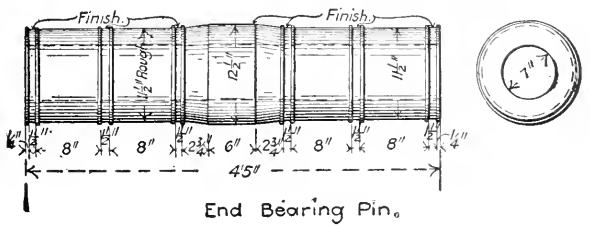

End Bearing Pin.

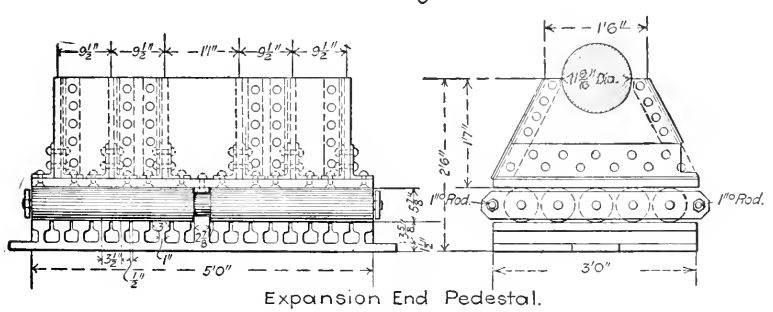

Expansion End Pedestal.

C. T. T. Co. R. R. Bridge.

riveting T-rails to a base plate. The fixed-end pedestal is similar to that at the expansion end, except that it is seated directly on the masonry at the same height as the expansion end masonry,

and is made 11 in. higher to compensate for the omission of the rollers and bed plate.

Consolidated Traction Company. — The electric street cars of the Consolidated Traction Company cross the tracks of the Delaware, Lackawanna & Western Railroad between Jersey City and Newark, N. J., on two single-track skew plate-girder viaducts. The 94-ft. spans have a curious arrangement of girders in which one of them, 78 ft. long, is supported at one end on a vertical column, and at the other end is suspended from the extremity of a girder which cantilevers nearly 15 ft. beyond the supporting column. The adjacent ends of these girders are cut at an angle of about 45 degrees with the vertical, and their tapered webs are reinforced at the ends, that of the suspended girder having inclined stiffener angles about a foot from the

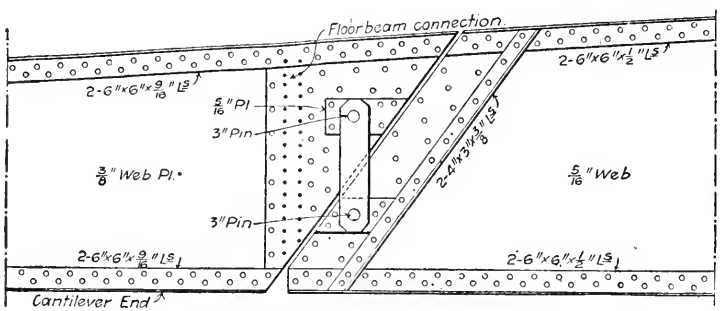

Support of Suspended Span.

C. T. Co. Newark Bridge.

edge and parallel with it. The girder is suspended by a pair of vertical sheared plate links about 9 in. wide, with a 3-in. pin through each end. No jaws are provided on the ends of the girders to secure transverse stability, and the joint is a flexible one.

Fort Point. — The viaduct which has been designed to carry Atlantic Avenue over the tracks of the Boston Terminal Company at Fort Point, Boston, is composed in part of plate girder spans. The substructure has been built, but the superstructure has not yet been built, although the design has been detailed as here described. In one span the three lines of longitudinal girders, about 75 ft. long and $8\frac{1}{2}$ ft. deep over all, are supported at one end by a field-riveted connection through the end web stiffener angles, and at the other end are suspended by vertical

eyebars from the tops of vertical columns. Each column is made with a trough-shaped cross-section composed of two built channels and a cover plate, and has near the top a cast steel flanged bearing riveted to each web, to receive a 5-in. horizontal pin.

The horizontal bases of these castings are seated on the

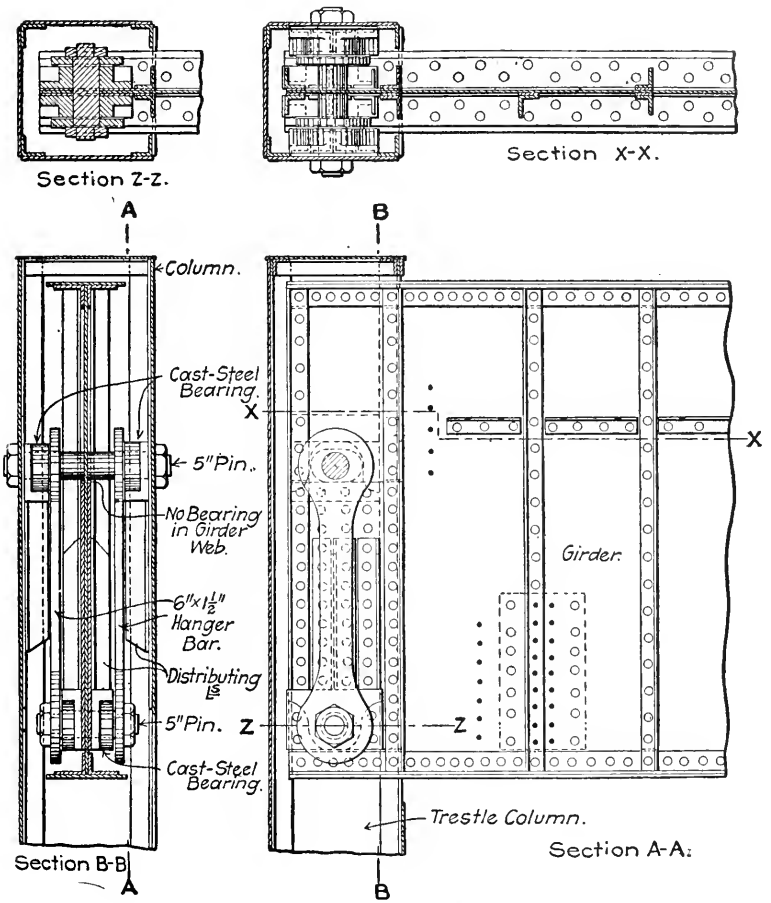

Suspended Bearing for Expansion End.

Fort Point Highway Bridge.

milled upper ends of vertical bearing angles riveted to the column, and distributing the loads through a sufficient rivet-bearing area.

The pin engages two $6 \times 1\frac{1}{2}$-in. eyebars 4 ft. long on centers,

which at their lower ends take a similar but shorter pin through the lower edge of the girder web. The end of the girder is thus free to swing back and forth inside the column to allow for expansion and contraction, but fits so closely between the bearings that there is little room for transverse motion.

The end of the web of the girder is reinforced with side plates, and has a steel bearing casting on each side seated on vertical stiffener angles like those of the column. An 8×10-in. slotted hole on the center of the upper pin gives clearance for the latter to pass through the girder without bearing. This bearing is sensitive to slight movements, cannot transmit any longitudinal stresses from column to girder, and is not in danger of being impaired by the accumulation of dirt or rust. The design is not shown in the drawings.

Harvard. — The long spans of the Harvard Bridge, Boston, alternate with the short spans, and the girders of the former spans project 15 ft. $\frac{1}{2}$ in. beyond the pier centers to form, on both sides of the long spans, cantilever arms, from which are suspended the 75-ft. $2\frac{1}{2}$-in. connecting girders. The adjacent ends of the webs of the cantilever and suspended girders are notched about 12 in. on their upper and lower sides respectively, so that they will just fit together, with an offset joint having about 1 in. vertical and horizontal clearance. The web-stiffener angles are set back to the inner edges of the notches, and the projecting ends of the web are reinforced and bored for 4-in. pins, which engage the pair of vertical eyebar suspension links. Lateral rigidity is secured and longitudinal expansion and contraction is permitted by top and bottom flange cover plates, which are riveted to the end of one girder and bolted through slotted holes to the other, and vice versa.

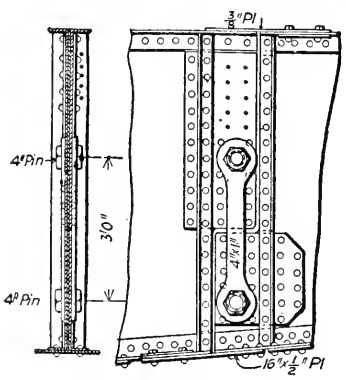

Detail at S.

Harvard Highway Bridge.

Chicago, Milwaukee & St. Paul Railway. — A double-track through plate-girder bridge was designed in 1890 for the line of the Chicago, Milwaukee & St. Paul Railway, but was not finally built in accordance with these original plans. It is about 202 ft. long between the end bearings on the abutments, which are

square with the bridge axis. It is divided into three approximately equal spans by two river piers skewed at an angle of nearly 45 degrees with the bridge axis. The ends of the girders all have pin bearings, and all are movable longitudinally except at one abutment. On both piers the adjacent spans are supported on the same pedestals, thus affording a continuity of the lower flanges, which permits expansion without the distortion that would otherwise occur with the skew piers.

Riveted shoes are bolted to the bottom flanges of the girders, and are much wider transversely than the bottom flanges are. They take bearing on sole plates extended beyond the flange angles and reinforced by vertical transverse gusset plates riveted

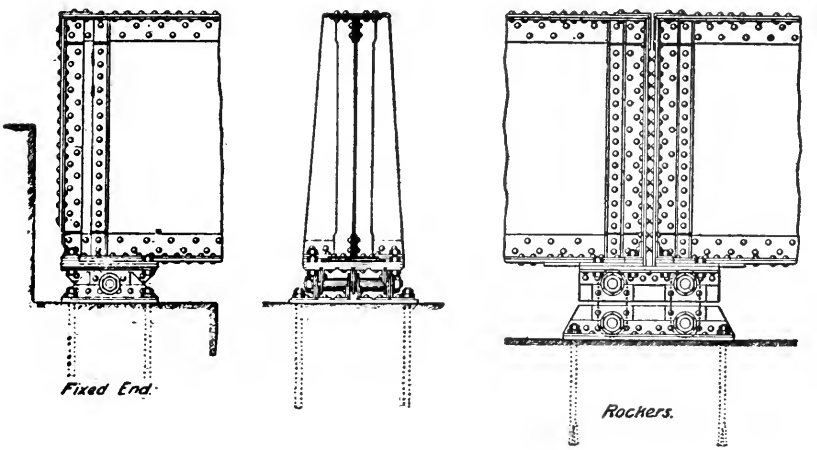

C. M. & St. P. Ry. Bridge.

to the web-stiffener angles. They have three double longitudinal web plates spaced far enough apart to provide lateral stability for the support. The pedestal is like the shoe reversed, but is somewhat longer and wider. It has double-web plates in the same planes as those of the shoe, and these pairs of plates are far enough apart to receive between them solid vertical links, bored to engage top and bottom pins, which connect them and lock the different members of the bearing together.

These links serve as rockers and permit longitudinal movement without lateral displacement. They are considered advantageous because they afford perfect distribution of the bridge weight on the pedestals and cannot be clogged with dirt or rust as

rollers sometimes are. At the abutment ends of the girders of one span each shoe has three links, and each link has two pins. At the opposite or fixed-end abutment the shoe and pedestal webs overlap and are locked together longitudinally by a single pin. At both the piers all the bearings are similar to those of the expansion abutment, except that each shoe and pedestal receives the ends of the two adjacent girders in the succeeding spans and has two sets of pins and links, one under the bearing of each girder, thus securing continuity between the lower flanges of the girders in both spans.

Terre Haute Bridge. — The 120-ft. deck plate girders of the Wabash highway bridge at Terre Haute, Ind., have bearings on the upper ends of short vertical posts required to support the girders at a height above the masonry pier corresponding to the deeper parallel trusses which form part of the construction of six spans of the bridge. At the fixed ends the lower flanges of the girders are riveted to pairs of eccentric knee-brace plates at the tops of the posts, and the bottoms of the posts have symmetrical extended pairs of web plates forming pedestals seated on bed plates made of rails with top and bottom plates long enough to reach across the pier tops and receive the adjacent pedestals for two spans.

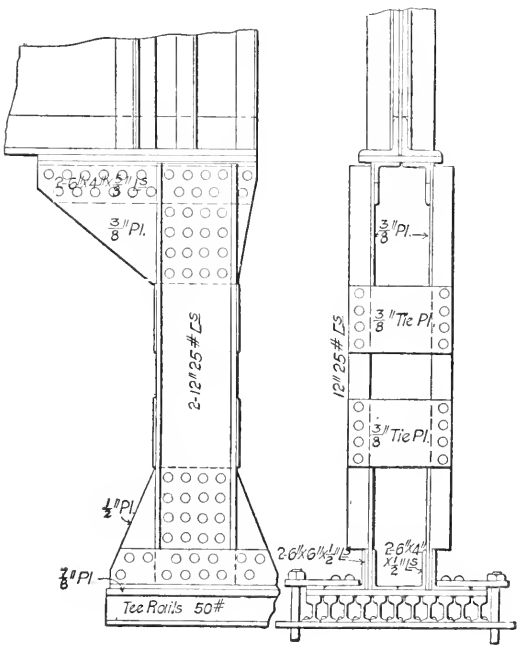

Support for Fixed End of 120-Ft. Girder.

Wabash Highway Bridge.

At the expansion ends riveted shoes are riveted to the lower flanges of the girders and engage 5-in. pins through jaw plates in the upper ends of rocker posts 38-in. long on centers.

The lower ends of the rocker posts engage pedestals corresponding to the top shoes, and like those used for small trusses. These pedestals are seated on 792-lb. nests of 8-in. segmental rollers with steel T-rail bed plates set with $\frac{1}{4}$-in. sheet lead fillers on stone pedestals 14 in. thick. The rollers are connected by top and bottom end strips, and the latter are unusual in that they are made with angles, utilizing the horizontal flanges for connections with the anchorbolts engaging slotted holes. The rollers are seated on rail beds similar to those for the fixed ends, except that the center rail is higher than the others, and forms the equivalent of a guide rib engaging a groove in the center of the rollers.

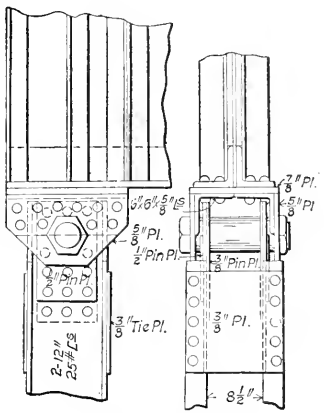

Pin Bearing Rocket Post of 120-Ft. Girder.

Wabash Highway Bridge.

CHAPTER XXIV

WEB AND FLANGE SPLICES

Web and flange splices should be designed to take the maximum stresses that occur at their respective locations in vertical and horizontal directions. Their design for short-span girders is usually a very simple matter where they may consist simply of pairs of cover plates for the web joints. Flange members being now readily obtainable in single pieces for heavy sections up to 70 ft. or more in length, and practicable up to 100 ft., the necessity is obviated for any flange splices in any except the very longest spans, although in bridge shops remote from the rolling-mills the convenient shipping lengths of materials will usually limit the design. In very heavy work it requires skill and experience to arrange the joints in the different members in the flanges so that they may be spliced to the best advantage with a minimum amount of extra metal and the shortest possible rivets. Shop splices are located usually in accordance with the convenient lengths of materials, and in the positions where the stresses can be best cared for. Field splices are generally determined in position by the requirements of the erection and for shipping lengths. It is necessary that the webs and both flanges should terminate at practically the same points in field splices, and great pains must be taken for the arrangement of the flange pieces in heavy girders. More rivets should also be allowed for a given stress in the field splice than are required in the shop splice, on account of the difficulties and imperfections of driving. Full-length flange plates may be generally made in three pieces, with the joints arranged so that they will be covered and spliced by short extensions of the plates next outside of them. The splices of flange angles and vertical flange plates are usually staggered on opposite sides of the web, and reversed on opposite sides of the center of the girder, and are arranged so that the splices at the same end of the girder come as close as possible to each other, and are made with the same set of plates and angles.

Harvard. — Harvard Bridge, Boston, is a very heavy highway

structure with twenty-five spans, including ten 75 ft. $2\frac{1}{2}$ in. long. These have four main lines of deck plate girders with horizontal top flanges and inclined bottom flanges. They are 8 ft. deep at the piers, 5 ft. deep at mid-span, and are made with $\frac{3}{8}$ and

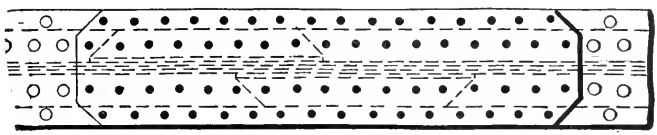

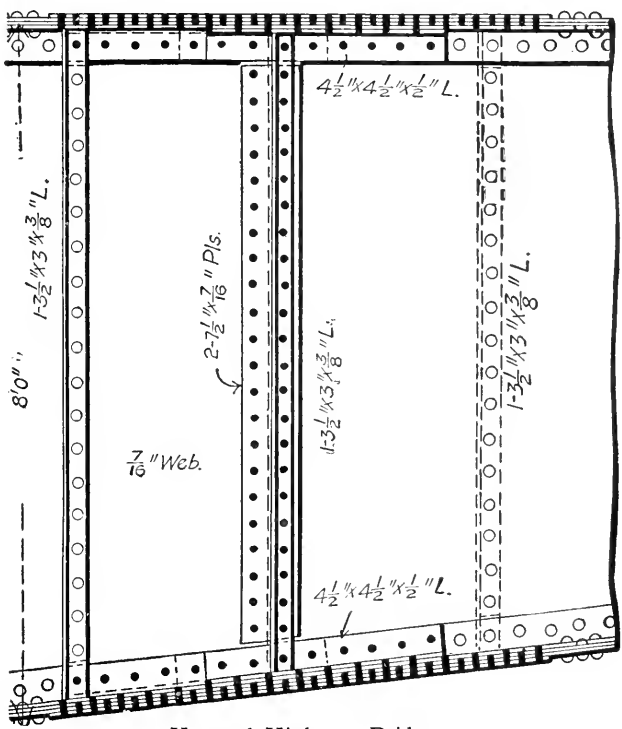

Harvard Highway Bridge.

$\frac{7}{16}$-in. plates 5 ft. long, web-spliced with double $7\frac{1}{2} \times \frac{7}{16}$-in. cover plates with two vertical rows of rivets. The flanges have pairs of 5 × 5-in. angles with a maximum of four thicknesses of 16-in. cover plates, and are spliced with $4\frac{1}{2} \times 4\frac{1}{2}$-in. cover angles

about 3 ft. long, which are staggered on opposite sides of the web, and together serve for the two joints. The cover plates are spliced by the overlapping ends of the top plates, and by 16-in. cover plates 5 ft. 8 in. long. The splices were field-riveted by pressure machines, while the girders were at the assembling yard some distance from the site.

Kinzua. — A typical example of shop splices for a short-span girder with T-shape flanges is afforded by the 61-ft. spans, $6\frac{1}{2}$ ft. deep, for the Kinzua viaduct. The web is made with $\frac{3}{8}$-in. plates spliced by pairs of $12 \times \frac{3}{8}$-cover plates cut to clear the flange angles, and having four vertical rows of rivets. The 6×6-in. flange angles on both sides of the web have their joints opposite each other in the line of the web joint, and are spliced with pairs of $5 \times \frac{1}{2}$-in. side plates and by the single-piece 14-in. cover plates.

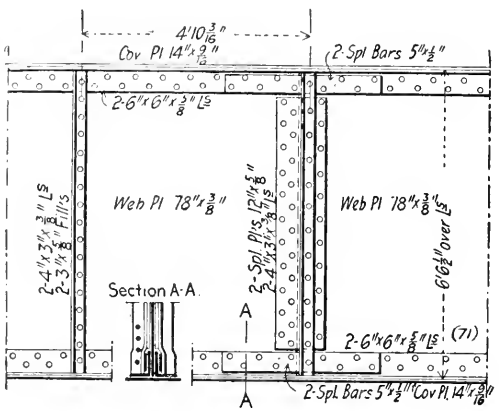

Kinzua Bridge.

Grand Trunk Railroad. — The $87\frac{1}{2}$ ft. $\times$ 8-ft. plate girders of a single-track deck span of the Grand Trunk Railroad, Canada, are unusual on account of the different cross-sections adopted for the top and bottom flanges, and for the odd sizes of the angles rolled in European mills. The H-shape top-chord flange has four $8 \times 4\frac{1}{2} \times \frac{3}{4}$-in. angles and two $14 \times \frac{3}{4}$-in. web plates throughout, and is reinforced in the center by two $7 \times \frac{7}{16}$-in. web cover plates 27 ft. 4 in. long. There are no horizontal flange cover plates, and the upper surfaces of the top flanges are free of rivet heads which would be obstructions for the tie seats. The flange angles are made in three sections with their joints adjacent to each other on opposite sides of the web, and spliced by $7 \times 3\frac{1}{2} \times \frac{5}{8}$-in. cover angles 33 in. long, planed to fit their fillets. The flange web plates are also made in three lengths, each with their joints opposite and spliced by pairs of $7 \times \frac{3}{4}$ and $4\frac{3}{4} \times \frac{3}{4}$-in. cover plates 36 in. long. The bottom flange has a maximum cross-section composed of two $8 \times 4\frac{1}{2} \times \frac{3}{4}$-in.

angles and five 16½-in. cover plates aggregating $3\frac{7}{16}$ in. in thickness. The angles are made in three lengths with their joints opposite those of the top flange and spliced with a pair of $7 \times 3\frac{1}{2} \times \frac{5}{8}$-in. cover angles 39 in. long. The first and second

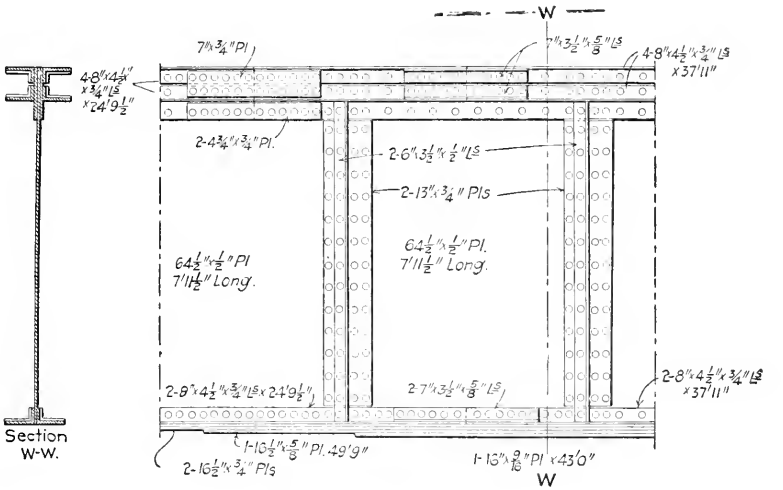

Grand Trunk R. R. Bridge.

cover plates are each made in two pieces with their joints spliced by the overlapping ends of the outer center cover plate. The web plates are spliced with pairs of cover plates extending only between the flanges the portion of the web included in the flanges not being spliced.

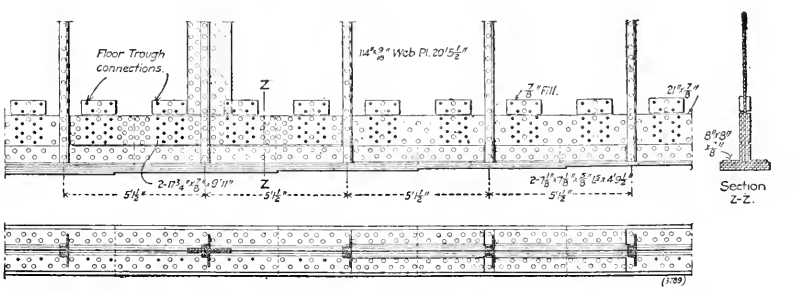

Worden Bridge, C. C. C. & St. L. R. R.

Worden. — The 105-ft. double-track through span of the Chicago, Cleveland, Cincinnati & St. Louis Railroad, near Worden, Ill., has plate girders 9 ft. 6½ in. deep, back to back of flange angles. Each web has five shop-riveted splices made

with a pair of cover plates and six vertical rows of rivets. The flanges have opposite top and bottom splices staggered on opposite sides of the web in adjacent panels. The flanges have $8 \times 8 \times \frac{7}{8}$-in. angles from 15 to $61\frac{1}{2}$ ft. long, spliced with single $7\frac{1}{8} \times 7\frac{1}{8} \times \frac{5}{8}$-in. cover angles 4 ft. $9\frac{1}{2}$ in. long. The $21 \times \frac{7}{8}$-in. side flange plates each have two splices made with $17\frac{3}{4} \times \frac{7}{8}$-in. cover plates nearly 10 ft. long, serving the joints on opposite sides of the web. The flange cover plates were made in full-length pieces without splices.

Sixteen-Mile Creek. — The $105\frac{1}{2}$-ft. double-track through plate girders for the Sixteen-Mile Creek bridge of the Grand

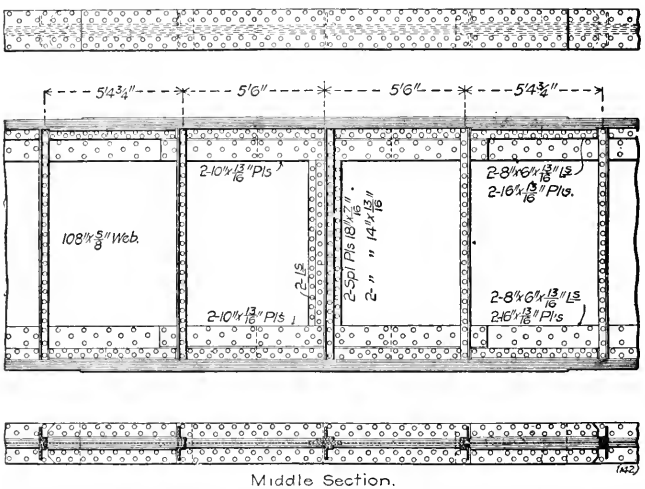

Sixteen Mile Creek Bridge, Grand Trunk R. R.

Trunk Railway, Canada, are 10 ft. deep and have $\frac{5}{8}$-in. web plates in lengths of from 16 to 19 ft., shop-spliced with pairs of $18 \times \frac{7}{16}$-in. and $14 \times \frac{13}{16}$-in. cover plates cut to clear the flanges. The flanges are made with pairs of 16-in. side plates, 6×8-in. angles, and 19-in. cover plates for the center girder. The maximum chord section has three $\frac{13}{16}$ and three $\frac{3}{4}$-in. cover plates. The joints in the flange angles on opposite sides of the web are staggered about $5\frac{1}{2}$ ft., and are spliced by separate short cover angles for each joint. The flange side plates are spliced by long $10 \times \frac{13}{16}$-in. plates covering both staggered joints.

Clyde River. — The center girder of the four-track 110-ft. $8\frac{5}{6}$-in. through Clyde River bridge of the New York Central & Hudson River Railroad is one of the heaviest ever built, and

has an extreme depth of about 12 ft. 2 in. over all. The web plates are 134 in. high and 1 in. $\frac{5}{8}$ and $\frac{3}{8}$ in. in thickness, spliced

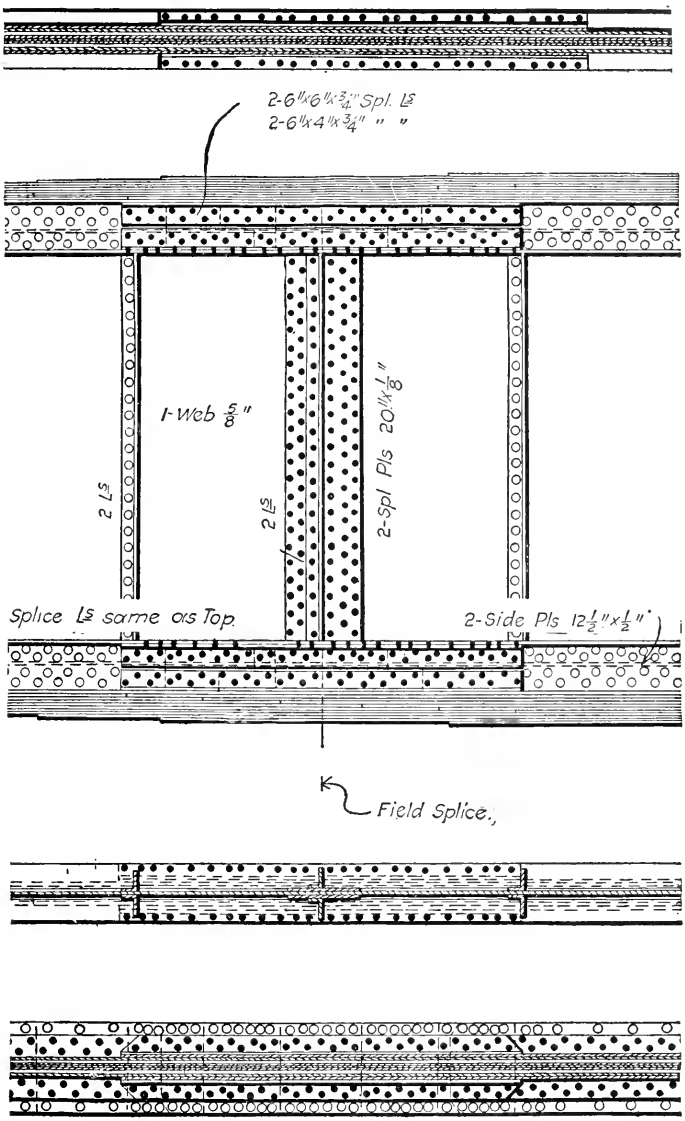

Clyde River Bridge, N. Y. C. & H. R. R. R.

with two cover plates which in the end panels are 20 in. wide, $\frac{5}{8}$ in. thick, and have 66 rivets on each side. In the center,

where the shear is a minimum, they are reduced to 14 × ⅜ in., with 44 rivets on each side. The two field-riveted splices have 20 × ½-in. plates with 66 rivets on each side. The top and bottom flanges were each made with two 8 × 8 × 1-in. angles, two 6 × 6 × 1-in. angles, four 12½ × ½-in. web flange cover plates, and eleven 24-in. cover plates with a combined thickness of 6½ in. The flange-angle joints are staggered and overlap the web joints, and are spliced with 6 × 6 × ¾-in. and 8 × 8 × ¾-in. angles 9 ft. long.

The flange cover plates are shop-riveted together complete, by a single row of widely pitched ⅞-in. rivets through each edge clear of the flange angles, and all other rivets in them are 1 in. in diameter and are field-driven, so as to allow them to be shipped separate from the girder sections. In the center of the girder the vertical rivets through the flange cover plates and angles have a maximum grip of 7½ in. After the three sections of each girder were field-spliced, the top and bottom flange cover plates, previously shop-reamed to fit, were assembled to them and field-riveted, thus involving a great number of long and large field-driven rivets. The depth of the girders was so great that web plates could not be made to run horizontally as usual, and therefore they run vertically, and are spliced at alternate web-stiffener angles, the 1-in. plates being 84 and the ⅜-in. plates 106 in. wide.

Lehigh Division, No. 76. — The 110-ft. 9-in. double-track through span of bridge No. 76 of the Lehigh Division, Lehigh Valley Railroad, has two plate girders 9 ft. deep, with web plates about 10 ft. long and ½ and ¾ in. thick. The maximum flange section consists of two 16¼ × ⅝-in. side plates, two 8 × 8 × ⅞-in. angles and five 26 × 1 1/16-in. cover plates, two 8 × ⅞-in. and 3½ × ⅞-in. bars. The web has seven shop-riveted splices, each made with a pair of cover plates 14 or 21 in. wide, and with two pairs of horizontal 14 × ¾ in. cover plates at the upper and lower ends of the vertical plates for the three middle splices, which are entirely clear of the web flange plates. At the ends of the girders the upper and lower horizontal web splice plates are made, each with two pairs of 8 × ⅞-in. and 7 × ⅝-in. plates. The girder was shipped in three pieces, and the two field-riveted web splices were made similar to the shop splices, except that the horizontal plates were longer, so as to splice the web flange plates also. At these points the staggered flange joints were spliced with a pair of 8 × 8 × ⅞-in. angles, two 20 × ⅞-in. and

two 12 × $\frac{3}{4}$-in. side plates, besides the projecting ends of the horizontal cover plates, which were arranged as shown in the diagram to enable the sections of the girder to be kept separately and conveniently matched in the field. At these points the splices provided for 245,600 lbs. shearing stress and 100,218,000 lbs. bending moment.

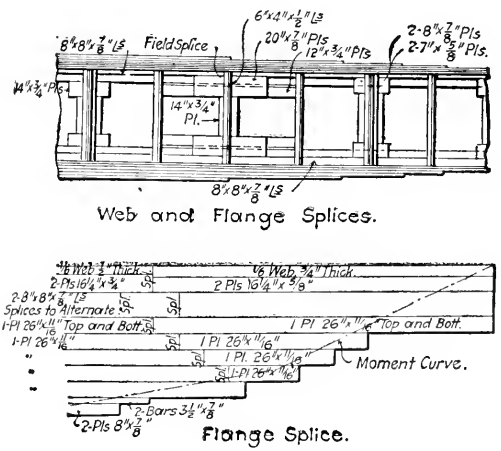

Lehigh Division No. 6 Bridge, L. V. R. R.

New York Central, No. 454. — The center girder of the 116-ft. double-track through span of bridge 454 of the New York Central & Hudson River Railroad has shop-riveted flange splices designed to secure a minimum rivet length of less than 5 in.

The girders were 10 ft. deep from back to back of flange angles, and about 11 ft. deep over all. The bridge was proportioned for a live load consisting of two 142-ton locomotives followed by a train load of 4500 lbs. on each track, and was built of medium steel sub-punched and reamed. The girders were built according to the New York Central & Hudson River Railroad standard specifications, and the moments required a heavy maximum flange section, which was made with a gross area of about 152 sq. in. It was built up with a T-shape from a pair of the heaviest angles attainable, namely, 8 × 8 × 1⅛-in., two 18 × $\frac{11}{16}$-in. vertical side plates, and five 24-in. cover plates, with a combined thickness of 3$\frac{7}{8}$ in. The flange angles were each made in three pieces with planed butt joints staggered about 4½ ft. apart at web stiffener points on opposite sides of the web, the center of each pair being about 29 ft. from the center of the

girder. Both flange angle joints on opposite sides of the web and at the same end of the girder were spliced by the same pair of $6\frac{7}{8} \times 6\frac{7}{8} \times \frac{7}{8}$-in. cover angles about $10\frac{1}{2}$ ft. long, which were

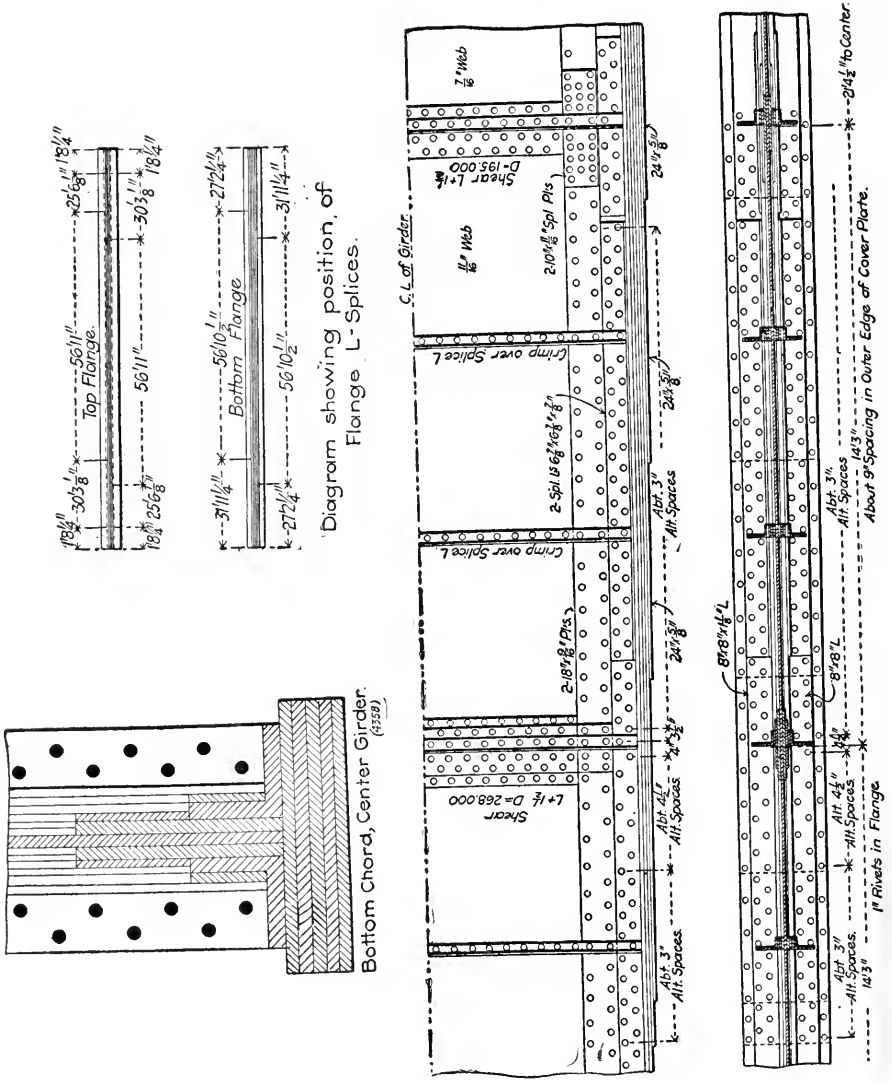

Bridge No. 454, N. Y. C. & H. R. R. R.

planed down from 8 × 8-in. angles and rounded so as to exactly fit inside the 8 × 8-in. angles and have their edges flush. The rivets through them had a grip of $5\frac{9}{16}$ in., which was $\frac{9}{16}$ in. less

than if they had engaged the center cover plate, which did not quite reach to the splices. The flange side plates were spliced about 21 ft. each side of the center of the girder, where their thicknesses changed from $\frac{9}{16}$ to $\frac{11}{16}$ in. These splices were made with 10-in. plates on their upper edges and with $6\frac{3}{4}$-in. plates on top of the flange angles over their lower edges. The girder webs varied in thickness and were spliced at every third panel, about 14 ft. 3 in. apart, by double cover plates with four or six vertical rows of rivets, corresponding to the varying shear. The web splice plates terminated at the side plates, and therefore did not splice the lower outer edges of the webs, which were not considered in calculating the flange area. The flange cover plates were arranged without any splices, except for the full-length ones next the angles, which were spliced by the projecting ends of the next ones outside. Some of these latter, $24 \times \frac{11}{16}$-in. plates, were made as much as 85 ft. long, to avoid splices. The flange angles and cover plates were assembled and reamed before being riveted to the webs; and all rivets were driven by pneumatic pressure machines, care being taken to hold on to them until they were cooled to a dark color before releasing the pressure in the jaws of the machine.

Rankin. — One of the girders in the approach to the double-track Rankin bridge over the Monongahela River is $116\frac{1}{2}$ ft. long over all, with a $107\frac{3}{4} \times \frac{9}{16}$-in. web made in 15-ft. sections spliced with three sets of double cover plates giving long top and bottom lines of rivets. Each chord has a maximum cross-section of two $8 \times \frac{7}{16}$-in. angles, two $16 \times \frac{5}{8}$-in. side plates, and five $24 \times \frac{7}{8}$-in. flange cover plates. Each side plate and angle is made in two pieces with the shop-riveted joints arranged so that no two are close together, and all are spliced with short cover plates and angles.

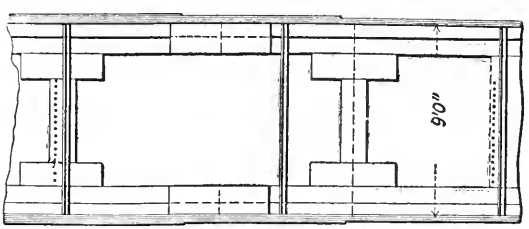

Rankin Bridge.

Pine Creek. — The 127-ft. 10-in. plate girders of the deck double-track span of the New York Central & Hudson River Railroad Pine Creek bridge have $1\frac{1}{2}$-in. webs, 114 in. deep, made

in 15 to 20-ft. lengths, shop-spliced with pairs of 14 × $\frac{1}{2}$-in. cover plates with four vertical rows of rivets. Each flange angle is made in three pieces with their joints staggered on opposite sides of the web but opposite each other, top and bottom. On one side of the center of the girder both joints in one flange on opposite sides of the web are spliced with the same pair of cover angles as shown in the elevation, p. 117. On the other side

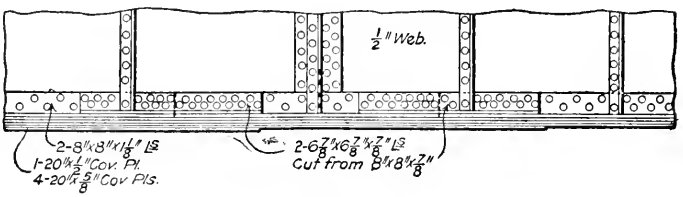

Second Flange Splice

Pine Creek Bridge, N. Y. C. & H. R. R. R.

of the center each angle is separately spliced with a pair of short angles as here shown, all the splice angles being made from 8 × 8 × $\frac{7}{8}$-in. bars with each flange cut down to 6$\frac{7}{8}$ in. wide, and the back rounded to fit the fillet of the flange angle.

Bradford No. 7. — The 128$\frac{3}{4}$-ft. single-track through bridge No. 7 on the Bradford Division of the Erie Railroad has plate girders 9$\frac{1}{2}$ ft. deep, with special H-shape top and bottom flanges, each made with four 6 × 8-in. angles and several 20-in. cover plates giving maximum gross top and bottom cross-sections of about 79 and 85 sq. in. respectively. The flanges have two shop splices made with 6 × 8-in. cover angles over the staggered joints. The flange cover plates are spliced by the projecting ends of the outer plates. The webs are spliced by pairs of cover plates clearing the flanges and by pairs of horizontal 11-in. plates riveted over the webs of the flange angles.

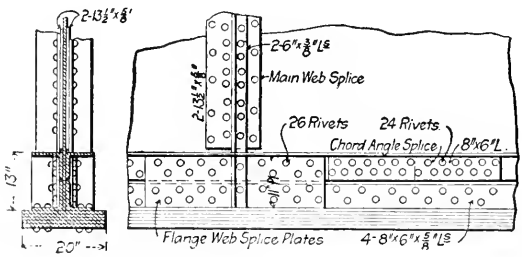

Bradford No. 7 Bridge, Erie R. R.

Armour Avenue.—The four 69-ft. girders of the three-track Armour Avenue crossing of the Chicago Junction Railroad are

87 in. deep and have the webs made in three lengths, shop-spliced with pairs of vertical $12\frac{1}{2} \times \frac{3}{8}$-in. plates and four rows of vertical rivets. The 6 × 6-in. flange angles are reinforced by 14-in. cover plates and by 12-in. side plates for the top flange, and $22\frac{1}{2}$-in. side plates for the bottom flange. The first bottom cover plate is 20 in. wide to afford special floor connections. The flange angles and plates are made in single lengths without splices, and the appearance of splices in them is due to the use of cover plates over the lower part of the side plates to complete the web splices and provide for the horizontal stresses assumed to be carried by a fraction of the sectional area of the web.

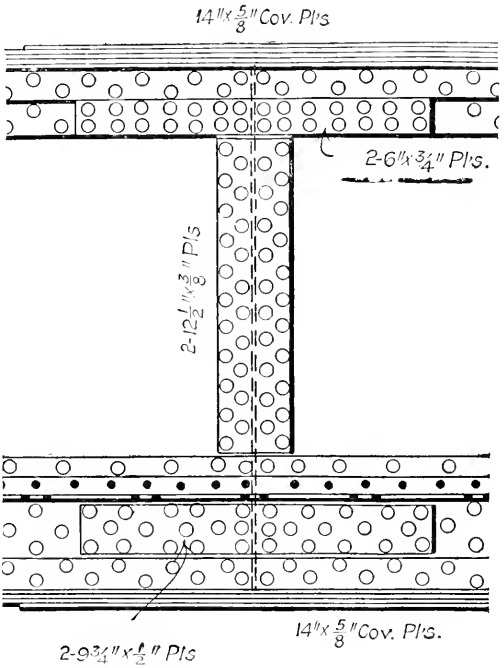

Armour Ave. Bridge, C. J. R. R.

PART IV

MULTIPLE RAILROAD SPANS OVER STEEL TOWERS

Long series of multiple spans of plate girders are usually elevated railroad structures, viaducts, bridge approaches, or track elevations to avoid city grade crossings. For present purposes elevated railroads may be considered as designed for special light train service and will not be here considered. Viaducts will be considered as independent structures without long spans, or where the truss spans are subordinate features, and they may either cross dry valleys, or valleys and streams. As they are usually built only where the elevation is too great for economical embankments, their height is likely to be considerable and affords a positive distinction from grade-crossing track elevations which are generally not very much higher than provides clearance for street traffic underneath.

Bridge approaches are almost or quite always on a grade and often curved, and are subordinate to the river spans to which they lead, but otherwise do not differ essentially from viaducts. In track elevation there are either isolated spans and groups of spans just long enough to carry the tracks over intersecting streets, or the spans are likely to be of uniform moderate lengths forming a continuous structure supported on steel bents of vertical posts. Viaducts and approaches are likely to be much higher and to have their span lengths determined by equating the cost of the superstructure equal with that of the substructure, including the towers. Under ordinary conditions this is likely to give alternate tower and connecting spans of about 30 and 60 ft., increasing with unusually great heights. In viaducts the towers have battered posts in vertical transverse bents so that it is difficult to connect the longitudinal girders directly to them, as may be done where the posts are vertical.

In all multiple span structures the girders usually have flange bearings with sole plates and are seldom pin-connected or provided with expansion rollers, which not only are scarcely needed for the moderate lengths, but which would involve difficult supports on the columns or cross-girders. Often, however, they

have drop ends to allow the long, deep girders to take bearing at the same level as the short, shallow ones and still keep their top flanges in the same line. This is accomplished either by giving the ends of the bottom flanges an upward bevel, or by notching the webs. The short tower girders almost always have both ends riveted fast to the towers, and sometimes alternate long girders have both ends fixed also, spacing expansion joints at every second or even every third tower. Usually one expansion and one fixed connection are located at the same transverse bent.

CHAPTER XXV

VIADUCTS

Eighteen-Mile Creek Viaduct, 700 ft. × 100 ft.

Bridge No. 9 of the New York, Chicago & St. Louis Railroad crosses Eighteen-Mile Creek on a steel viaduct about 700 ft. long and nearly 100 ft. in maximum height. The original structure had pin-connected spans which carried one track of the New York, Chicago and St. Louis Railroad, and one track of the Western New York & Pennsylvania Railway, and was

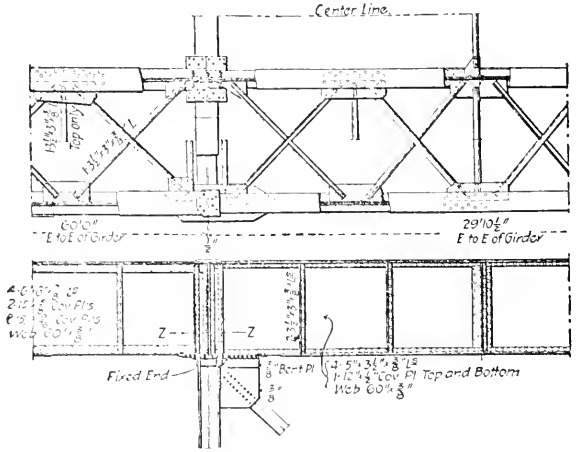

Tower and Connecting Spans.

replaced without interrupting traffic on either road, by a plate girder viaduct using the old masonry piers, and having the same center line. The new structure comprises seven 30-ft. towers and eight 60-ft. deck plate-girder spans, the latter proportioned for two 136-ton locomotives followed by a train load of 4000 lbs. per lin. ft. on each track, and for a dead load of 1200 lbs. per lin. ft., quantities which produce a maximum moment of 1,575,000 ft.-lbs., and an end shear of 116,000 lbs. The 30-ft.

spans are proportioned for a dead load of 900 lbs. per lin. ft., and develop moments and shears of 458,500 ft.-lbs. and 69,750 lbs. respectively.

The transverse tower girders have their webs spliced to the projecting upper sections of post webs, and the longitudinal girders are seated on the tower caps and on the top flanges of the transverse girders to which they are riveted at the fixed ends and bolted through slotted holes at the expansion ends. A short clearance is left between the ends of adjacent girders in the same line. The pair of longitudinal girders on each side of the center line of the viaduct are connected by vertical transverse sway-brace frames about 7 ft. apart, and by top and bottom zigzag angles between them in the planes of the top and bottom flanges. The pairs of stringers are connected together across the center line of the viaduct at every second panel, by single transverse horizontal angles in the planes of the top and bottom flanges and without any sway-brace diagonals.

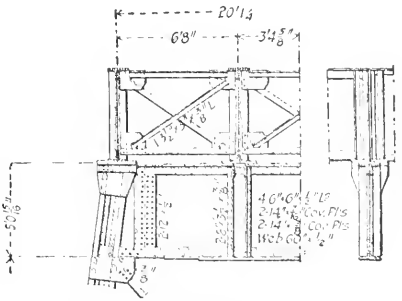

Half Tranverse Section at Top of Viaduct.

White Water River Viaduct, 688 ft. × 30 ft.

Four short-span steel plate-girder bridges and viaducts have recently been built within the city limits of Richmond, Ind., for the single-track line of the Cincinnati, Richmond & Muncie Railroad. The superstructures are of a uniform character of heavy riveted work with towers, single trestle bents and deck and through girder spans, and the substructures are of concrete and stone masonry. The most important structure is the White Water River crossing, which is 688 ft. long, and extends diagonally across the main channel of the river, and above a paper mill and mill-race to the bank beyond. It has seven towers 30 ft. long, and four single trestle bents supporting one 100-ft. span over the channel, one 70-ft. span over the paper mill, one 45-ft. shore span, one 23-ft. span and fifteen 30-ft. spans. All spans have two lines of girders on a horizontal grade with a minimum clearance of about 30 ft. above high

water. The piers have footings a few feet below the surface of the rocky soil, and those for the twelve middle bents of towers and trestles have a uniform height of about 2 ft. above high water. Each girder has one fixed and one expansion end which are respectively adjacent to the expansion and fixed ends of the adjacent girder, so that every trestle bent receives one fixed and one moving end of a span.

The 70 and 100-ft. girders are 7 and 10 ft. deep respectively, with inclined end sections of bottom chords beveled up to the drop ends 72 in. deep, which allow them to be supported on the same seats as the shorter spans, which are all 6 ft. deep except a 23-ft. span and one 30-ft. span at one end, which are only 4 ft. deep to allow greater clearance over the roadway below. The girder webs are $\frac{3}{8}$-in. thick, and stiffened with 3×3, 4×3, and 5×3-in. vertical angles. The flanges are made with pairs of 6×6-in. angles and 14-in. cover plates. The ends of the 100-ft. girders have the web plates reinforced in the end panels, and take bearing on 5-in. pins through ordinary pedestals (see p. 176). At the fixed end the pedestals are bolted to the tower caps, and at the expansion ends they are seated on 3-in. solid rollers. At the expansion ends of all other girders, the bottom plates slide on top of the trestle cap plates between longitudinal guide strips which have cover plate strips riveted on top of them and projecting over the edges of the sliding plates, almost to the edges of the lower flange angles, so as to lock the girder in place vertically and transversely and permit longitudinal motion.

The trestle bents in the middle of the viaduct are about 32 ft. high, and fourteen of them are braced together in pairs with longitudinal and transverse horizontal struts and X-bracing to make towers 30 ft. long, with a maximum width of 19 ft. 8 in. on centers at the bottom. The longitudinal bracing is made in one vertical panel, and the transverse bracing in two. The columns are battered 1 : 6 in vertical transverse planes, and are made with built channels having their webs in transverse planes 16 in. apart, back to back.

When the bridge was designed, it was intended that in the last tower at the paper mill end of the viaduct, the tops of the four piers should be 13 ft. below the rail base, and short trestle bents were built to correspond. When, however, the excavations for the pier footings were made, the ground was found to be so soft and unstable that the footings were carried much deeper, bringing the pier tops to positions 12 and 18 ft. lower

than had been intended. A vertical column, corresponding to a trestle post, was then built and seated on each pier. Each column had a horizontal cap plate on which the foot of a trestle post was afterwards seated as if on the pier. The columns were braced with longitudinal and transverse top and bottom horizontal struts and X-braced in each face to form a stable tower. They were thoroughly painted, concrete was filled around them, and the earth was back-filled around them to the original level, leaving the upper portions projecting above the surface.

Alternating with the towers there are three single trestles which have horizontal pin bearings in top and bottom shoes and form rocker bents, as shown in the transverse semi-elevation. The details of the posts correspond to those of the posts in the tower bents, except that the shoes are riveted to the cap and base plates. An interesting feature of the erection of these spans was the erection by protrusion of each span across temporary intermediate falsework towers, the ends of the girders being provided with temporary timber extensions to support them from cribbing while they were jacked down to final position.

Uganda Viaducts, 3000 ft. × 112 ft.

The Uganda Railway is a single-track line from Mombassa on the Indian Ocean to Lake Victoria in equatorial Africa, and has 27 steel plate girder viaducts from 40 to 112 ft. high. Their aggregate length and height are about 3000 ft. and 8000 tons, and all are made with 20-ft. towers 40 ft. apart, with stiff diagonal lateral bracing in accordance with ordinary American practice. Most of the viaducts were on a 2 per cent grade and a 4 degree curve, but, excepting the special features required on this account, the upper parts were duplicates at the same stories, and pieces were interchangeable; all girders were 36 in. deep, and all connections were field-riveted.

Each tower is made with two vertical transverse bents of battered columns having horizontal struts and X-braces on all faces which divided it into four panels or less. Each viaduct was painted with a distinctive color, and in some instances where it had not been found convenient to select all of the standard members belonging to that structure, the completed work showed four or more colors, indicating that interchangeable pieces had been selected from other viaducts to save trouble.

Each 40-ft. girder required about 500 field-driven rivets, and there were about 350,000 field-driven rivets in all. All of the viaducts have the steel ties prolonged to carry two cantilever plank sidewalks and steel hand rails, which necessitated a large number of the field-driven rivets. All bracing is made with angle irons and riveted connections, and all the secondary members and light steel pieces were distributed by hand along the line of the viaduct before the erection of the girders.

The H-shaped columns are made throughout with four $6 \times \frac{3}{8}$-in. Z-bars and one $8 \times \frac{3}{8}$-inch web plate normal to the vertical transverse plane of the tower bent. The flanges of the Z-bars are connected by tie plates, and the longitudinal struts are field-riveted to the column webs. Transverse struts are field-riveted to connection angles on the sides of the columns. Except the 16-ft. upper stories and the irregular bottom lengths, the columns are made in one story sections from 25 to 34 ft. long, and are spliced together just above the horizontal struts by web and flange cover plates field-riveted at both ends.

The details of all the columns correspond to those of the upper sections here shown, and are so uniform that the 845 pieces were made from four drawings, one of which required 318 duplicate sections, 158 of them right-handed and 160 left-handed. The lower sections of the column have extended base plates stiffened by longitudinal and transverse vertical webs, as indicated by the details of a single column. These bases are in reality separate column sections $4\frac{1}{2}$ ft. long, which are field-spliced to the main sections. They are very irregular on account of the different angles of the longitudinal and transverse braces, which require corresponding variations in the connection plates. These variations were shown in detached elevations of the specific plates, which were grouped on a single tracing and referred to the standard plan and sections here given.

The horizontal transverse struts are of two patterns, those for the upper story being made with pairs of $6 \times 3\frac{1}{2}$-in. angles back to back, and those for the lower stories with I-shape cross-sections made up with two pairs of 5×3-in. angles back to back, latticed. In both cases the ends of the angles form jaws engaging the column connection plate; 1039 struts were ordered on the same tracing and made from four sketches, including those here shown.

The transverse X-bracing is made with single $3\frac{1}{2} \times 3$-in. angles with field-riveted connections at the ends and to a center

gusset plate between their vertical flanges. In the lower stories each diagonal is spliced at the inner section, so as to allow shorter lengths for shipment, and in all cases each piece was shipped separately, the total number of pieces required for all viaducts being 1604, exclusive of the irregular struts in the bottom stories. The horizontal longitudinal struts are made with I-shape cross-sections having two pairs of 5 × 3-in. angles back to back, latticed. The longitudinal X-bracing corresponds in general to that in the upper stories of the transverse bents.

The plate girders are set to form chords of the curvature of the alignment, and the transverse tower bents are set at right angles to them. All girders are divided into panels from 3 to 5 ft. long by vertical web-stiffener angles milled at the ends to bear on the flange angles and fillered out flush with the webs of the latter. Single web-stiffener angles are used on each side of the girder web, except where the sway-brace frames are attached. At these points there are two angles on the inner face of the web with a clearance between their outstanding flanges sufficient to receive the connection plates for the cross-frames. At the ends of the girders there are four stiffener angles with a filler plate between the flanges of the outside pair.

Each panel formed by the sway-brace frames, in both long and short spans, is X-braced by $3\frac{1}{2}$ × 3-in. bottom lateral angles riveted across the lower flanges of the girders. One diagonal in each panel is a single continuous angle, and the other one is made with two pieces cut to clear it at the intersection, where it is spliced by the connection plate. The 20-ft. spans have no top lateral bracing, but the 40-ft. spans have top laterals similar to the lower laterals, except that they are riveted to the webs of the girders just below the top flanges, as shown in the engraving of a 40-ft. girder. The vertical flanges of the intersecting angles are turned in opposite directions so as to clear the horizontal connection plate field riveted between them at their intersection. All bearings are made with sole plates bolted to the column caps. In the 20-ft. spans no provision is made for expansion and contraction, but in the 40-ft. span the anchorbolt holes are slotted at both ends.

The rails are carried on 8 × 15-in. creosoted pine timbers laid flat-ways across beams spaced $3\frac{1}{2}$ ft. apart on centers and supported on the top flanges of the girders. These beams are pairs of 7-in. channels which alternately project about $2\frac{1}{2}$ ft. at

opposite ends to carry the sidewalk and angle-iron hand rail, as shown in the diagram and detail of the roadway.

Fort Dodge Viaduct 2582 ft. × 134 ft.

The Mason City & Fort Dodge branch of the Chicago, Great Western Railway, or Maple Leaf Route, crosses the Des Moines River and valley at the city of Fort Dodge, where the valley is about 1½ miles wide, and the river is about 160 ft. below the level of the prairie, on a single-track steel viaduct 2582 ft. long and 134 ft. high from low water to rail base. It crosses the river channel, five highways, a railroad freight yard, and a single-track railroad, and has four 219-ft. spans. The remainder of the structure consists of steel towers from 80 to 130 ft. high, supporting alternate 38-ft. and 75-ft. plate girder spans for a straight level track.

The viaduct is made of unreamed medium steel proportioned for a live load consisting of two 154-ton locomotives followed by a train load of 4000 lbs. per lin. ft.

The towers all have four battered posts in two vertical transverse planes, and are X-braced longitudinally and transversely by pairs of 7 × 3½-in. angles, latticed, in from one to four panels. The upper stories are all alike, and they have no horizontal struts except at top and bottom. The posts have T-shape cross-sections made with an I-beam and two channels.

The two lines of main girders, 10 ft. apart on centers, are braced together by ordinary sway-brace frames, and top and bottom zigzag angles riveted to connection plates on the girder flanges. They have a uniform depth of 7 ft. from back to back of flange angles. The regular girders on top of the towers are 39 ft. 3 in. long from out to out, and 38 ft. long on centers of bearings. They are made with two ⅜-in. web plates spliced with two cover plates and four vertical rows of rivets. Each flange has two 6 × 6 × $\frac{9}{16}$-in. angles, and the web projects ¾ in. above the top flange angles to lock the ties in position. Panels from 2 ft. 6 in. wide at the ends, to 3 ft. 8 in. wide in the center, are made by pairs of 3 × 5 × ⅜-in. vertical stiffener angles riveted to the opposite sides of the web, with filler plates at sway-brace points only, and fitted ends. These girders extend across the full width of the tower caps, and their end panels are notched from the top flange to the center line to

form seats 16 in. long to receive the ends of the connecting span girders, which have the lower sides notched to correspond. The lower halves of the end panels of the webs are reinforced

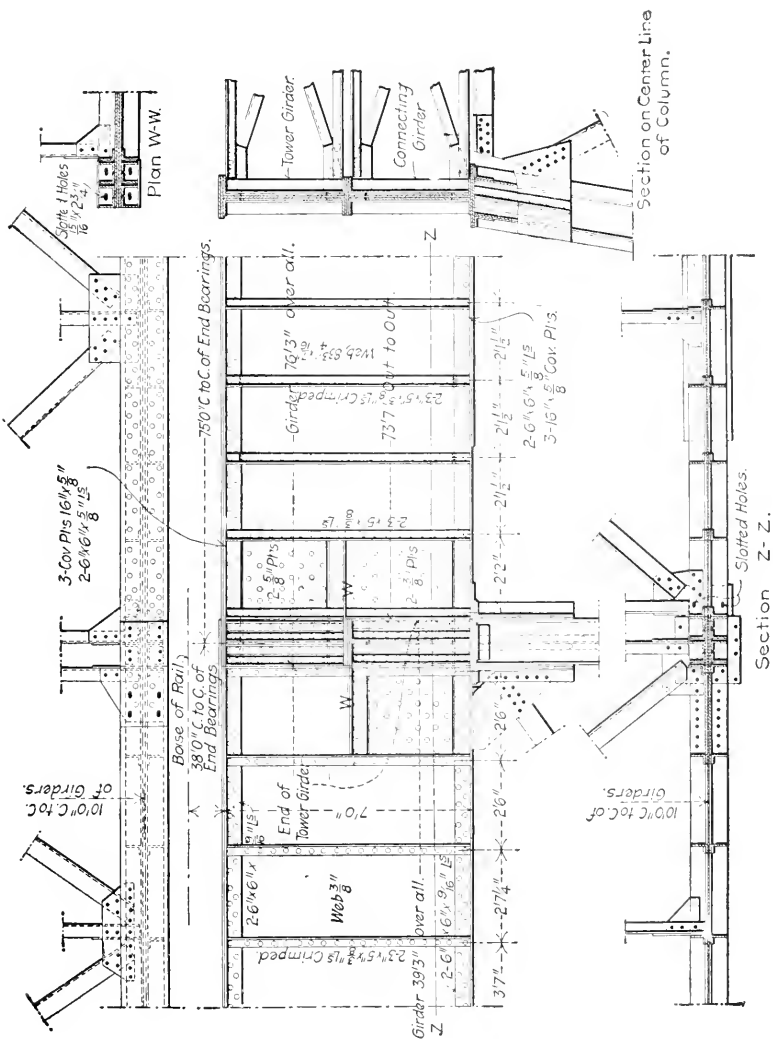

Details of Girders and Seats on Towers.

to a thickness of $1\frac{1}{2}$ in., and have ten vertical stiffener angles riveted to them to form a sort of pedestal on the center line of the tower column for the seat of the supported girder.

The regular connecting girders are 76 ft. 3 in. long over all, 75 ft. long on centers of bearings, and 73 ft. 7 in. long on the lower flange. They are made like the 38-ft. girders, except for the dimensions of the materials. The web is made in three lengths, and both top and bottom flanges are reinforced by three cover plates of different lengths. The ends are notched on the lower side to correspond with and be the reverse of those in the 38-ft. girders, and are similarly reinforced, except that the outside web plates extend the full depth of the girder. The drop ends are seated, as indicated in the view at the top of the tower post, on the ends of the 38-ft. girders, and the top flanges of both girders are connected by cover plates, which are generally field-riveted to the long girders and bolted through slotted holes to the short girders at expansion joints, and riveted to them at fixed joints. At their bearings the girders are bolted together with four bolts which, at the expansion joints, engage slotted holes in the lower flanges of the long girders. This arrangement permits the 75-ft. girders to expand and contract freely with temperature changes, the tower girders being riveted fast to the towers at both ends.

At the towers nearest the truss spans the 75-ft. girders have expansion joints at the tower girders at both ends. In all other cases the 75-ft. girders have expansion joints at one end of the tower girders and fixed joints at the other ends. At the east end of the viaduct the girders connecting the tower to the abutment are 38 ft. 9½ in. long over all, and resemble the 75-ft. girders, except that the ends are not notched at the abutments, but are full depth there, and are seated on special cast steel pedestals with transverse ribs engaging holes mortised in their base plates.

At the west end of the viaduct the abutment girders are similar to those at the east end, except that they are 75 ft. 9½ in. long over all. In both cases they are anchorbolted through the pedestals to the abutment masonry, and have expansion joints on the tower girders. The girders at both ends of the truss spans are also special, and are like the regular 75-ft. girders at the ends away from the spans. At the ends adjacent to the spans they are made full length, and are seated on cross-girders connected to the end posts of the trusses. At this point the end sway-brace frame consists of three horizontal struts and two panels of X-bracing. Near the center line of the girder there are horizontal angles riveted to the outsides of

the web about 6 ft. from the ends of the girders, which diverge to connect with the top chords of the trusses, which are spaced about twice as far apart as the girders are.

The adjacent ends of the trusses and girders both have fixed connections to the tower, and the arrangement of braces makes the lateral system continuous between the viaduct and the span. The braces are pairs of $6 \times 6 \times \frac{7}{16}$-in. angles and are calculated for a tensile or compressive stress of 66,500 lbs. At the river ends they are connected directly to the top lateral system of the spans, and at the shore ends they distribute their stresses to both top and bottom lateral systems of the viaduct through the intermediate cross-struts made of two $6 \times 6 \times \frac{3}{8}$-in. angles which connect the webs of the girders at their extremities.

Five hand-car retreats 12 ft. long and about 9 ft. wide outside of the track are placed at intervals of about 500 ft., and are supported on angle-iron brackets riveted to the girders opposite the sway frames, and on the trusses they are supported directly by the floorbeams. All of them are covered by a solid plank floor, and protected by a hand rail which extends the full length of the viaduct, offsetting at the hand-car retreats.

The Boone Viaduct, 2685 ft. × 185 ft.

The double-track viaduct of the Chicago & Northwestern Railway across the Des Moines River, between Boone and Ogden, is 2685 ft. long, 185 ft. in maximum height, and weighs 6196 tons. In length, height, and weight combined it ranks with the most important viaducts in the world, only a few of which exceed it in height. It contains one 300-ft. deck trussed channel span over the river, and has eighteen steel towers and one rocker bent which with the end abutments support eighteen 45-ft. tower spans and twenty-one 75-ft. intermediate spans.

Each tower is made with a pair of vertical transverse bents 45 ft. apart divided vertically into stories of about 40 ft. and X-braced longitudinally and transversely in every panel. Each bent has a pair of columns 19½ ft. apart on centers at the top, and battered 1 : 6. They have H-shape cross-sections made with two 20-in. and one 15-in. I-beam. The X-braces are made with pairs of channels, latticed and field-riveted at the ends between jaw plates shop-riveted to the columns. For the

transverse braces, the jaw plates are riveted across the column flanges; for the longitudinal braces they are bent Z-shape and riveted to the I-beam webs and flanges, and are reinforced by angles on the column flanges. The columns have base plates seated on cast iron pedestals securely bolted to the piers. On one side of the tower the bases are bolted rigidly to the bases, and on the other side they are bolted through slotted holes, and bearings are made on planed phosphor-bronze sliding plates

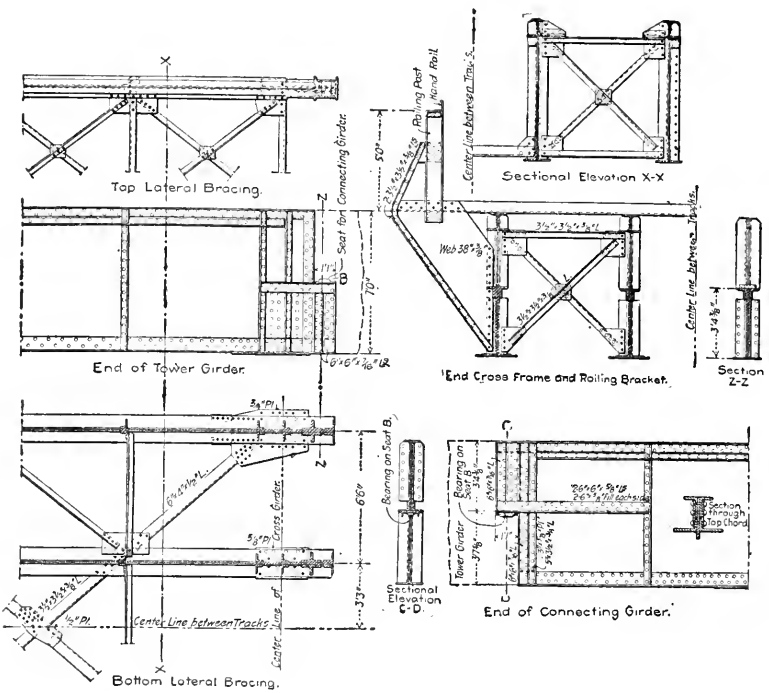

Girders and Bracing.

interposed between the base and pedestal. Pairs of 4-ft. plate girders are seated on kneebrace brackets, and have their webs field-riveted across the tops of the column flanges.

Four lines of 7-ft. longitudinal plate girders $6\frac{1}{2}$ ft. apart are seated on the top flanges of the transverse girders, and have their upper corners notched, as shown in the details, to afford seats for the drop of the connecting span girders. Each tower girder has a $\frac{7}{16}$-in. web, and two $8 \times 8 \times \frac{5}{8}$-in. bottom flange angles 50 ft. long, which overhang the outsides of the trans-

verse girders about $1\frac{1}{3}$ ft. clear at each end. The top flange is composed of two $6 \times 4 \times \frac{3}{8}$-in. angles 47 ft. 10 in. long, with their horizontal flanges up, and two $6 \times 3\frac{1}{2} \times \frac{3}{8}$-in. angles, about 45 ft. long, with their horizontal flanges down. The upper half of the web is notched to the ends of the 6×4-in. angles, and the lower part is reinforced by a pair of $\frac{5}{8}$-in. plates, five pairs of vertical stiffener angles are riveted to it, and across them a pair of horizontal shelf angles make a seat, at the outer end of which there is a beveled steel casting to receive the bearing of the drop end connecting span girder.

The girders are divided into intermediate panels about 7 ft. long by pairs of $5 \times 3\frac{1}{2} \times \frac{3}{8}$-in. vertical web-stiffener angles, which are milled to end bearings on the horizontal flanges of the 8×8-in. and the $5 \times 3\frac{1}{2}$-in. flange angles. These stiffeners are continued to the upper edge of the girder by short pieces about $9\frac{1}{4}$ in. long, which are lined in with them and fitted between the $6 \times 3\frac{1}{2}$-in. and 6×4-in. flange angles. The girders of each pair are braced together by transverse struts and X-bracing of single angles in the vertical transverse planes at each panel point, and by zigzag lateral angle bracing in every panel in the planes of the top and bottom flanges.

The inside girder of one pair is braced to the inside girder of the other pair by two panels of X-braced angles and five transverse angles at the intermediate panel points in the plane of the bottom flanges. At each end of the span a 6×4-in. angle, 29 ft. $4\frac{1}{2}$ in. long, is riveted across the top flanges and to the upper edge of a solid-web kneebrace on the outside of each outer girder. This kneebrace receives the 10-in. channel vertical post for the hand rail, which consists of 10-in. horizontal channel with the flanges turned down, and a bulb angle riveted to the upper side of the web, as shown in the cross-section.

The 75-ft. spans are similar to the 45-ft. spans, except the details of the end bearings of the girders, the dimensions, materials, and flange sections. The $8 \times 8 \times \frac{5}{8}$-in. lower flange angles are 69 ft. 11 in. long, and are reinforced by two $18 \times \frac{1}{2}$-in. cover plates, one of them 50 ft. 6 in. long, and the other 36 ft. 5 in. long. The top flange is made with two $6 \times 4 \times \frac{5}{8}$-in. angles 72 ft. 1 in. long, two $7 \times 3\frac{1}{2} \times \frac{5}{8}$-in. angles 68 ft. $2\frac{1}{2}$ in. long, and two $8\frac{1}{4} \times \frac{9}{16}$-in. side plates 39 ft. 11 in. long, which cover the middle parts of the vertical flanges of the top flange angles. The lower part of the $\frac{1}{2}$ in. web is

notched at both ends of the girder even with the ends of the bottom flange angles, and the overhanging upper ends are reinforced with four pairs of vertical web-stiffener angles. The under side of the drop end has a forged steel bearing seated on the cantilever end of the lower girder, and allowing deflection and temperature movements, as shown by the detail, p. 202. Vertical flange angles are riveted on all four sides of each bearing plate to prevent lateral or longitudinal displacement.

In designing this viaduct, such dimensions were chosen for the towers as would insure a base large enough for the result-

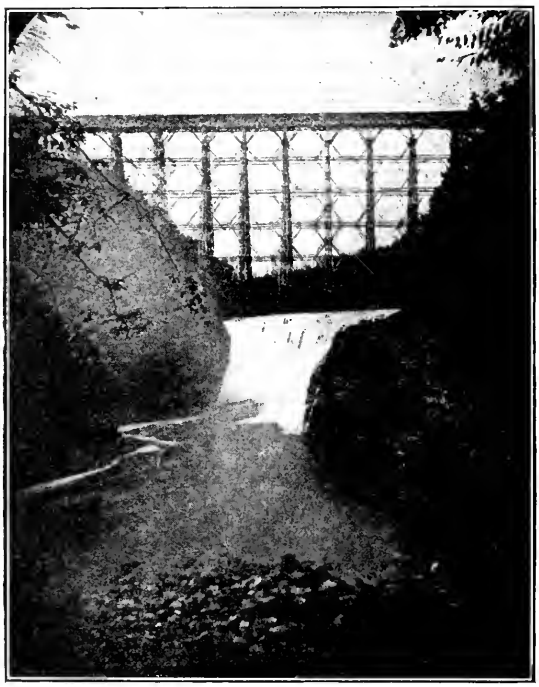

Portage Viaduct. Original Wooden Viaduct: 1852.

ants of all applied external forces to fall within it. This prevents any uplift at the feet of the columns, either from brake action or wind pressure. The length of spans is such that the uniform depth of the longitudinal girders is a mean between the greater theoretical economic depth of the long girders and the smaller theoretical economic depth of the short girders. The 75-ft. spans are proportioned for live and dead loads of 6100 lbs. and 1400 lbs. respectively, per lin. ft., and the 45-ft. spans for 7600

lbs. and 1250 lbs. per lin. ft. Soft steel was used throughout, and it and the workmanship was as required by the standard specifications of the Chicago & Northwestern Railway Company.

Portage Viaduct, 819 ft. × 235 ft.

The Portage viaduct, which for many years was famous as one of the highest railroad bridges in the world, is a single-track structure, officially known as Bridge No. 16 of the Buffalo Division of the Erie Railroad. It consists of a series of spans connecting towers seated on low masonry piers, built on solid rock in a deep gorge, with precipitous sides. It has a total length of 819 ft. between back walls, and a height of 235 ft. 2 in. from the bed of the stream to the base of rail. The original structure was a timber trestle built in 1852, and replaced in 1875 by a light wrought-iron structure with pin-connected members, and contained about 639 tons of iron.

As the traffic of the road increased in weight and volume, and the iron spans became inadequate, plans were made for replacing them with heavy riveted trusses and plate girder spans for increasing traffic at a higher speed. They are proportioned for a train load of 4000 lbs. per lin. ft., preceded by two coupled 123½-ton locomotives with 53-ft. wheel bases, and 35,000 lbs. on each of four pairs of drivers on 4½-ft. centers. This train-loading is nominally rather light in comparison with that adopted by some other important roads, but it is compensated for by the low unit stresses allowed, which result in the use of sectional areas about as heavy as are found in any corresponding structure. The train load is considered to be, in reality, a matter of little consequence, since the longest span on the Erie system is only 223 ft., and is therefore nearly covered by the locomotives. There are bridges and viaducts of total lengths up to more than 2000 ft., but they are all made up of spans shorter than that above mentioned, so that their severest stresses are caused by the locomotives. Longitudinal stresses are assumed at 2 per cent of the maximum live load, and the wind pressure is assumed at 600 lbs. per lin. ft.

The old towers and foundations were carefully inspected, and found to be in good condition, and as the former structure had been intended ultimately to carry two tracks, the substructure was considered adequate for the increased dead and live loads of a single track. All of the towers and masonry except one abutment were, therefore, retained, and the reconstruction consisted

in the replacement of the old track, floor system, girders, and trusses by new spans supported on the old towers. The old girders and trusses were seated directly on the caps of the tower columns, and were spaced 19 ft. 10 in. apart on centers. The track was carried on 8 × 16-in. cross-ties 22 ft. long and 14 in.

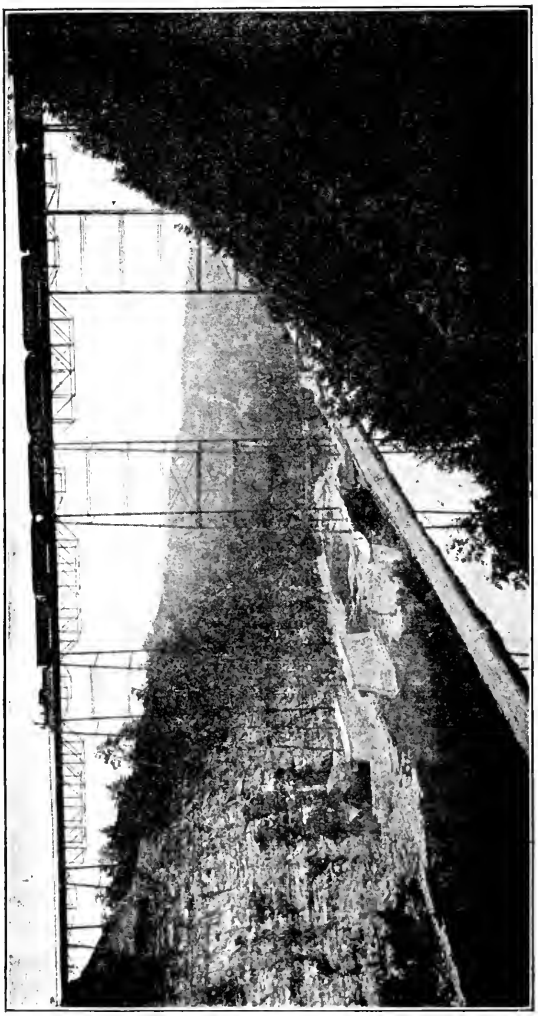

First Iron Viaduct, Built in 1875.

apart on centers which rested directly on the top flanges of the old girders and the top chords of the old trusses. The new structure was designed entirely to facilitate its substitution for the old spans without interrupting the regular train service, and the

width of the old span enabled the new one to be erected complete between them and be supported on new transverse girders without adding to the stresses in the old spans or throwing the latter out of service until the new were ready to receive the traffic.

The new trusses and girders are spaced 14 ft. apart on centers, thus clearing the tower columns, and are seated on the top flanges of heavy new transverse girders, field-riveted to the inner faces of the columns, several feet below their tops, some of which remain projecting above the upper flanges of the girders, while others are cut off even with the new girders.

The three truss spans are seated on special transverse girders 10 ft. deep made with solid-web plates at the end, and open center panels X-braced with heavy diagonal members, as shown in the detail. Each end of the girder is seated on a kneebrace bracket with double webs. The depth of the connection is calculated to afford sufficient stiffness to provide all necessary sway-bracing and compensate for the omission of diagonals in the upper panel of the tower. Each end of the girder is connected to the tower column by seventy-four $\frac{7}{8}$-in. field rivets at each end, exclusive of those in the brackets. The 50-ft. connecting girder spans are seated on solid-web transverse plate girders 6 ft. deep, with similar double-web kneebrace brackets at both ends. These girders have forty-four $\frac{7}{8}$-in. field rivets at each end in the connections to the columns, and, like the other girders, have vertical web stiffeners under the loaded points only. The arrangement of field rivets is such that all of them could be easily driven.

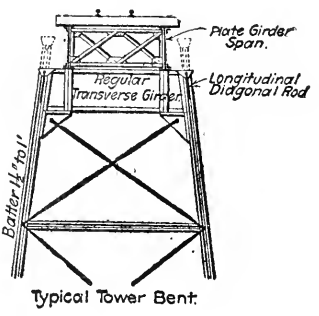

The longitudinal girders, nominally 50 ft. long, vary in actual length back to back of angles from 48 ft. $4\frac{1}{2}$ in. to 50 ft. $2\frac{1}{2}$ in. They have a uniform depth of 6 ft. $4\frac{1}{4}$ in. back to back of angles, and the webs are made in four sections with three field-riveted splices, each having thirty-six rivets in two vertical rows. The girders are braced at each splice by a vertical transverse frame, with two panels of X-brace angles. The panels between these frames are X-braced with the top-lateral system of diagonal rods with screw ends, which pass through $4\frac{1}{2}$-in. slotted holes

in the web of the girder just below the top flange. Their nuts take bearing on bent plates riveted to the outsides of the girder webs.

Each girder is divided into panels of about 6 ft. by pairs of vertical web-stiffener angles and fillers. At the ends, these angles in adjacent girders are field-riveted together through their outstanding flanges, so as to splice them rigidly, and make them form continuous girders except at expansion points, where they are bolted instead of riveted, and have slotted holes for the lower flange connections to the cross-girders. The ends of the girders adjacent to the trusses are similarly riveted to the end vertical posts of the trusses, and are also seated on solid-web kneebraces,

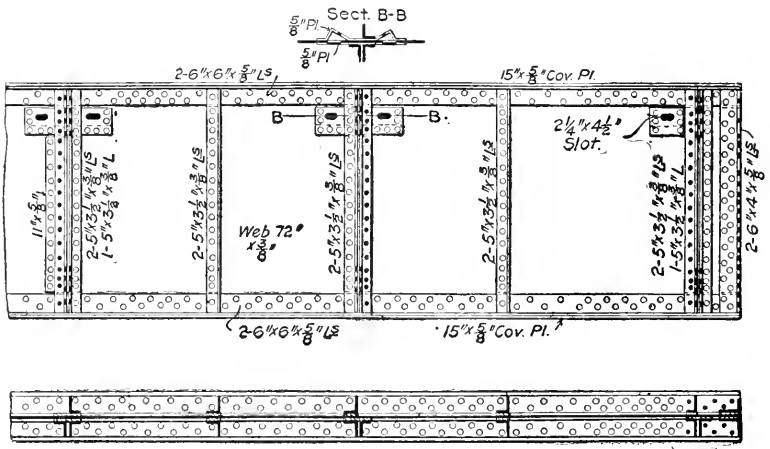

50-Foot Girder.

field-riveted to both members. At alternate panels an additional web-stiffener angle is field-riveted to the inside of the girder with clearance from the regular stiffener angle sufficient to receive between their flanges the connection plate for the sway-brace frames. The upper flanges of these frames are field-riveted to horizontal connection plates slotted to clear the stiffener angles and field-riveted to the girder flanges with two rows of rivets.

After the erection of the new spans, it was considered that lateral and transverse stresses would be satisfactorily transmitted to the sub-structure through the sway-brace frames, and the deep new transverse girders in the tops of the towers. Separate provision was required to transmit the longitudinal stresses to the bracing in the planes of the tower columns, which before

had received it directly from the old trusses and girders in the former structure. To accomplish this, the tops of the columns which directly supported the 50-ft. spans are cut off flush with the top flanges of the new transverse girders and capped with horizontal plates, field-riveted to the columns and the girders; these horizontal plates have projecting wings on each side, bent downwards to receive the pin connections for the longitudinal diagonal rods in the battered planes, which were cut down to the required length. At the ends of the truss spans the top chords of the latter are braced to the tops of the tower columns with short inclined struts. The columns are not cut off, but their tops are capped, as previously described, with bent plates that receive the riveted connections of these struts and of another set, which are field-riveted at the opposite end to the webs of the 50-ft. girders. Their points of connection to the girders are connected by horizontal transverse struts formed with pairs of heavy angles. This system of braces provides a balanced framework, and transmits the longitudinal stresses

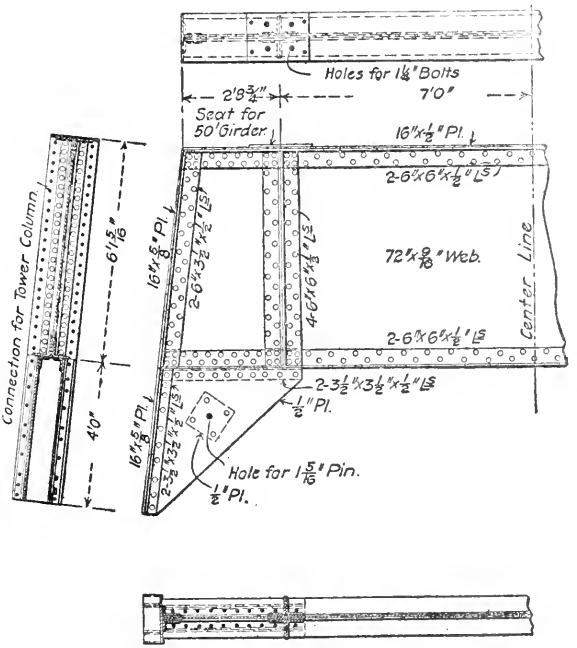

Regular Transverse Girder and Kneebrace

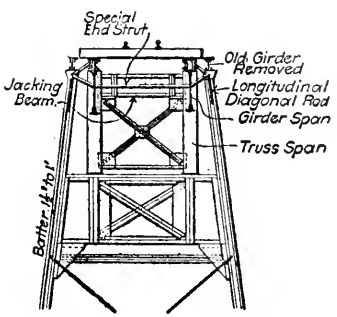

Tower Bent supporting New Truss Span.

from both truss and girder spans through the wing plates on the tops of the columns, which engage the upper ends of the longitudinal diagonal brace rods, as already described. This system was designed after the superstructure had been built and has been found to give satisfactory results, the viaduct developing abundant stiffness and rigidity under heavy train traffic.

The weight of new steel in the viaduct is about 500 tons.

Kinzua Viaduct, 2053 ft. × 301 ft.

The Kinzua viaduct of the Erie Railroad is a single-track structure 301 ft. high and 2053 ft. long, with thirty-nine alternate intermediate panels of $38\frac{1}{2}$ and 61 ft. The first structure was designed for locomotives weighing 161,340 lbs. on a $54\frac{1}{4}$-ft. wheel base, a dead load of 1000 lbs. per lin. ft., and a maximum wind pressure of 30 lbs. per sq. ft. It was built of wrought iron with Phœnix columns and lattice girders. The maximum stresses were 7000 lbs. per sq. in. for dead and live loads, the weight was 3,500,000 lbs., and the cost, in 1882, was $275,000.

The viaduct was used chiefly for coal traffic, and the increasing volume of it and the greater weight of locomotives made it desirable to replace the old superstructure by a new one on the same substructure, which was done in the season of 1900 in about four months by an average force of 100 men. The design of the new structure was strictly limited to conform to the principal dimensions of the old one, and it was built of open hearth steel proportioned for a live load of two 274,000-lb. locomotives with 52-ft. wheel bases followed by a train load of 4000 lbs. per lin. ft. for a longitudinal horizontal brake stress of 0.2 the maximum live load, for temperature stresses due to a variation of 150 degrees, and for wind pressures due to pressures of 30 lbs. per sq. ft. of the vertical surface of trains and girders, and 100 lbs. per sq. ft. on the vertical surface of the towers.

The new towers have the same general dimensions as the old ones. They comprise forty bents spaced alternately $38\frac{1}{2}$ and 61 ft. apart on centers, each with two columns battered 1:6 in the vertical transverse plane. All connections are riveted, and there are no tension rods, pins, or sleeve nuts in the principal members. The columns are each made of two built channels,

latticed together, flanges in, with 5×3-in. lattice bars. They are made in maximum sections up to about 63 ft. in length, butt-jointed and field-spliced, with planed ends and one plate on each side. At each splice and at the longitudinal strut connections midway between splices, the sides of the columns are stiffened by four cross-angles riveted on inside so as to make a kind of annular diaphragm. All columns are of uniform section in corresponding stories, counting down from the roadway: in the three top stories the cross-section has an area of 35.44 sq. in. made up of four $6 \times 4 \times \frac{3}{8}$-in. angles and two $24 \times \frac{7}{16}$-in. web plates; in the bottom story the section is 40.72 sq. in., with the corresponding angles and plates $\frac{7}{16}$-in. and $\frac{1}{2}$ in. thick, respectively. One column of each bent is seated directly on a cap stone of a pier, and the other one is seated on a nest of rollers, both columns being secured by the old anchorbolts, and shim plates being provided to pack the pedestals to compensate for any inequalities of height in the masonry. Washers were also provided under the bearing nuts to prevent the necessity of cutting off the tops of the bolts.

The tops of the columns in each bent are 9 ft. apart on centers, and are united by a $\frac{3}{8}$-in. vertical plate, 8 ft. $9\frac{1}{2}$ in. deep, riveted across their flanges on each side. These plates are each made in two pieces, one piece shop-riveted to each post section, and having a vertical butt joint in the middle, which is spliced with a single field-riveted cover plate. The plates have top and bottom flange angles, and virtually form a stiff box girder that rigidly unites the tops of the columns and makes a solid head for the trestle bent. These plates also receive the connections for all the main girders of the viaduct spans.

The original anchorbolts in the masonry piers are located in their transverse axes about a foot from each outer edge of the base plate; therefore, in order to utilize the whole area of the base plate for bearing on the masonry, two long rollers on each side of the center of each frame were replaced by two pairs of short rollers having an interval between their inner ends, which were set in spacing strips engaging grooves cut in the body of adjacent long rollers on each side, leaving spaces to clear the anchorbolts, as shown in the detail plan of the roller frame.

In their longitudinal faces the towers have in each story two panels of X-bracing, each member of which is composed of two 8-in. channels latticed together and riveted to pairs of connection angles on tie plates across the column flanges. In all of these

sway-brace diagonal struts, the channels are 10 in. apart, back to back, and at each intersection one strut has a section cut out to clear the other, and then its pieces are spliced together and connected to the continuous strut by two plates riveted to the backs of the webs of both sets of channels. In the transverse planes the columns are braced together only by horizontal portals and struts at the stories and splices about 30 ft. apart, and are notable for the omission of diagonal rods in the panels thus formed. They have at each corner solid plate kneebraces with curved outside flange angles which are field-riveted to both columns and struts.

The transverse portals and struts are essentially double lattice girders, each chord being a single channel with its web vertical, and the diagonal members of the girder being panels of single X-brace angles. The chords of these girders extend from out to out of the column bent, and are riveted across the column flanges on each side of the column. The upper strut is 4 ft. deep, and has four 6-in. channels; the next one is 6 ft. deep, and has 8-in. channels; the next is 7 ft. deep, and has 10-in. channels; and the lowest one is 8 ft. deep, has 10-in. channels, and is cambered $\frac{1}{2}$ in. in the middle, like a main truss. In each of the tallest towers the middles of the lowest transverse struts are connected by a horizontal strut with I-shaped cross-section, which is made of two pairs of angles latticed. The two horizontal panels thus formed are X-braced by single $1\frac{1}{4}$-in. rods pin-connected to the ends of the longitudinal struts, the latter being riveted to jaws formed by extensions of the tie plates on the top and bottom of the transverse struts.

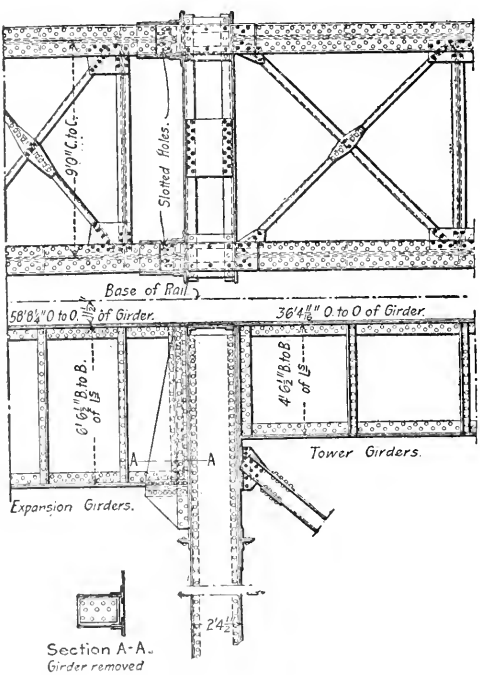

Girder Bearing and Column Connections.

The two lines of track girders are 9 ft. apart, centers, and their webs intersect the center lines of the columns in the lower flanges of the short spans, thus providing for their convenient connection to the heads of the trestle bents between the column webs. The short spans are field-riveted at each end through their end web stiffeners to the transverse web plates connecting the tops of the columns of each bent. The fixed ends of the long spans are supported in the same manner, and their expansion ends slide freely on heavy reinforced bed plates in deep pockets riveted to the flanges of the vertical stiffener angles on the plates on the opposite sides of the columns. The top flanges of adjacent girders are connected by cover splice plates over the tops of the trestle bents, which are riveted fast at fixed ends, and have bolts through slotted holes at the expansion ends. There are eight expansion joints for the girders; some of them are 199 ft. apart, and have four fixed-end connections of two long and two short girders between them, and the others are 260 ft. apart, and have four fixed-end connections of three long and two short girders between them. The plate girders are of the simplest construction, with two angles and one full-length cover plate in each flange.

The short spans are 5 ft. deep, and the long ones are 6½ ft. deep with the webs made in three sections spliced together with double plates between the flange angles and double plates on the vertical flanges of the flange angles, as shown in the detail page. The web-stiffener angles have fillers, except at the web flange splices where they are crimped. The girders have sway-brace frames about 10 ft. apart, and the panels between them are X-braced at the top flanges only. The total weight of the new structure is about 6,700,000 lbs., and it was erected from above by traveling falsework bridges which spanned from one tower to the second of the old structure, and permitted the old tower and three spans to be replaced, traffic, meantime, being diverted to another track.

Gokteik Viaduct, 2260 × 320 ft.

The Gokteik viaduct, Burmah, is notable for its great height and because the contract for its construction and erection was awarded by British capitalists to American builders in competition with European builders. It is part of a new railroad line from Mandalay, and is located at a point about 4000 feet above sea

level and about 400 miles from Rangoon. It crosses a deep and wide valley, and is built on top of a high transverse bank forming a natural bridge several hundred feet above the stream in the bottom of the valley. The top of this bridge is, however, over 300 feet below the grade of the railroad crossing the valley, and there remained above it a chasm which has been spanned by a steel structure 2260 ft. long and 320 ft. in maximum height, dimensions which place it in the front rank among the Kinzua, Pecos, and other great viaducts.

The general designs were approved by the English consulting engineers, who sent a resident engineer to the bridge works at Steelton, Pa., while the plans, details and shopwork were being executed. A very liberal spirit was manifested in this supervision of design and work which were both conformable in general to American practice. The contract was considered notable as being the first one let by English parties to a foreign firm at a total pound price for the building and erection of an important colonial structure complete ; the general custom being to not include the erection in the contract for the structure.

The viaduct was designed to carry two railroad tracks and to have a footwalk for pedestrians ; the towers are finished complete for this service, but the roadway and floor system is only constructed for one track and the footwalk at present, provision being made to add the necessary girders and trusses for the second track at some future time.

The combined dead and live load from the train, girders, etc., for each 1-meter track, which is carried on one trestle bent, was assumed at 387,000 lbs., and a wind pressure was assumed of 33.6 lbs. per sq. ft. on a continuous train surface 11 ft. high and on both sides of the structure.

The viaduct consists of fourteen 30-ft. single towers and one 60-ft. double tower, with ten 120-ft. lattice girder connecting spans and seven 60-ft. plate girder connecting spans, two of which are supported at their adjacent ends on a short rocker bent. Each single tower has four columns battered 5 : 24 in two vertical transverse bents. It is divided into equal vertical stories of about 35 ft. each, with longitudinal and transverse struts at every story, and stiff X-bracing in every panel of all four faces of the tower. In all bents the members are alike, and are interchangeable in corresponding stories from the top downward, except in the bottom stories, which are specially fitted to the irregular ground surface. The centers of the columns of every

tower are 40 ft. apart longitudinally and $24\frac{1}{2}$ ft. apart transversely at the top, and in the tallest bent, which has nine stories, they are 156.4 ft. apart transversely at the bottom. Each tower has horizontal diagonal bracing in every alternate story from the top down. Below the third story from the top, the middle points of the transverse struts are supported by a vertical intermediate column, and below the sixth story these struts are supported again at their quarter points by vertical members which, at the sixth story, are suspenders from the intersection of diagonals above, and below that are struts from the ground. At the

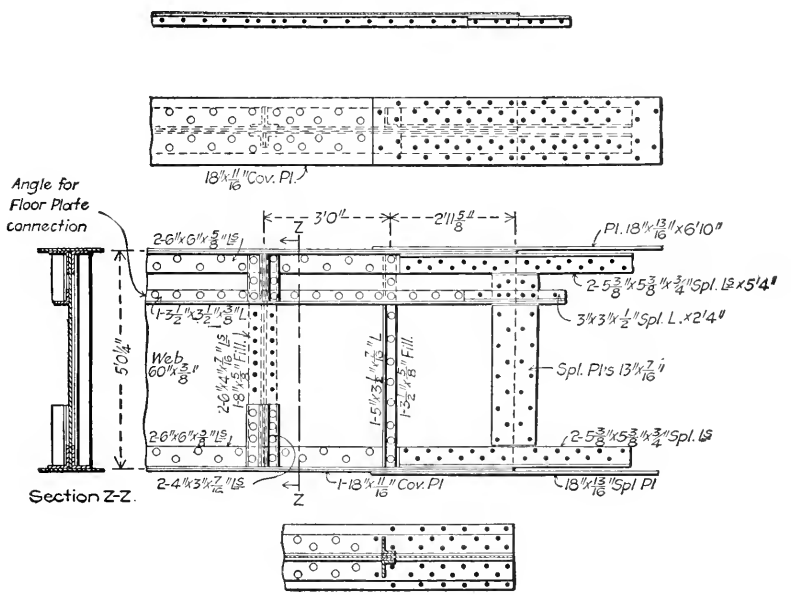

Web and Flange Splices.

highest part of the viaduct there is a double tower 60 ft. long, which has three transverse bents, and is braced in every panel of all faces like the single towers. In each bent the tops of the columns are connected by a double-web box plate girder 60 in. deep which has the longitudinal girders and trusses seated on its top chord. Every member of the tower bracing has a latticed, rectangular or I-shaped cross-section made up of four angles, and is field-riveted to pairs of $\frac{7}{16}$-in. gusset plates at the ends and intersections.

For 281 ft. at one end and 341 ft. at the other end the axis of the viaduct is curved to a radius of 800 ft. The intermediate

1638 ft. is a tangent, and its height varies from 130 and 213 ft. at the two ends to 320 ft. at the three-bent tower. Eventually there will be four lines of main longitudinal girders, one pair for each track, but at present there are only enough girders provided to carry one track and to support refuge platforms for pedestrians at every tower. There are three longitudinal girders at the top of each tower, one of the center girders there and one pair of connecting girders between adjacent towers being omitted. The 40 and the 60-ft. spans are plate girders respectively $42\frac{1}{4}$ and $60\frac{1}{4}$ in. deep, and the 120-ft. spans are single-triangulation lattice girder trusses with the centers of the top-chord panels supported by vertical struts from the bottom chord panel points. The chords are made in single-panel lengths and all members are field-riveted at connections. At the level of the lower flanges of the top chords of the lattice girders, the whole structure is decked with continuous flat steel plates $\frac{5}{16}$ in. thick. Between towers the space 11 ft. wide between the centers of the connecting girders is decked with similar plates supported by the main girders, and on the top flanges of two lines of track stringers and the floorbeams, which are $13\frac{1}{2}$ ft. apart.

The total shipping weight of the viaduct was 9,703,831 lbs. for columns and bracing, 6,543,818 lbs. for 120-ft. spans and 1,851,132 lbs. for 60 and 40-ft. spans. The tower girders weighed 15,300 lbs. each; the 40-ft. girders 10,400 lbs. and the 60 ft. girders 20,200 lbs. each. Nominally the shipping lengths were restricted as nearly as possible to a maximum of 30 ft., but much longer pieces, up to nearly 60 ft., were sent without much difficulty and arrived in good condition, few or none being loaded on deck. To facilitate the classification and separation of members and handling them by ignorant foreign labor, a very comprehensive color system was applied in painting them at the shops, which embraced all the principal colors and various combinations of them, stripes, etc. The erection traveler was painted black, each truss, girder, column, etc., was painted a distinctive color, and the joints of the columns when shop-assembled were each painted with a special combination of stripes on each adjacent piece. This system made the different pieces conspicuous whenever they were visible at all in a pile, and made their identification by the key easy for the erector.

The tops of the columns in each bent are connected by a box plate girder, 5 ft. deep, with its two webs field-riveted to the column webs at each end. Across the top of each tower there are

four 42-in. longitudinal plate girders, two of them seated on top of the columns, and the other two, $2\frac{1}{2}$ ft. apart on centers, seated on top of the box girder over transverse vertical diaphragms which stiffen its webs at the points of support. The ends of all these girders have a slight clearance from the center line of each trestle bent and from the ends of the girders or trusses of the connecting spans, which are in the same lines and are seated adjacent to them on the top of the bent. One of the middle girders in the top of the tower is omitted until such time as the viaduct shall be double-tracked, but the outside girder of that pair is put in place to support the floor of the refuge platform which covers the tower top outside the track.

The track is carried by a line of 23-in. plate girder stringers under each rail, which are web-connected to 27-in. plate girder

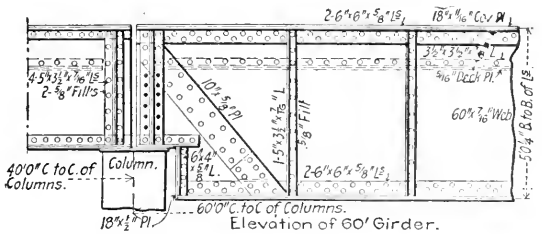

Girder Seats on Column Caps.

floorbeams 13 feet apart, with the top flanges of stringers and floorbeams flush. In the 60-ft. connecting spans at the ends of the viaduct, the floorbeams are web-connected to a pair of 60-in. plate girders 11 ft. apart on centers.

The tops of the towers and the connecting spans are completely decked with $\frac{5}{16}$-in. flat steel plates riveted to the top flanges of the floorbeams and stringers, to the lower flanges of the top chords of the 120-ft. span trusses, and to special horizontal angles on the webs of the plate girders. Continuous longitudinal timbers are laid on these plates above the stringers and receive the T-rails. The trusses for the 120-ft. spans are made with drop ends so that they are virtually supported at the top chords, and there is a similar detail at the ends of the 60-ft. plate girders where the edge of the bearing plate is beveled a little, as shown on an exaggerated scale in the detail sketch, to prevent the bearing coming on the outer corner when the girder deflects. On each tower the lower flanges of the stringers are a

few inches above the tops of the box girders which support the connecting spans, and are seated on them on piles of filler plates.

All material was delivered at track grade at one end of the viaduct and erected by a single overhead traveler running on the completed structure and overhanging it far enough to assemble one tower and its 120-ft. connecting span. This required an overhang of the unprecedented length of 166 ft. which was furnished by a pair of pin-connected cantilever trusses 219 ft. long, 40 ft. deep, and 24½ ft. apart on centers. They were mounted on a four-bent tower 20 ft. high, one side of which rolled on top of the outer connecting span trusses, while the other side rolled on a corresponding temporary outside truss which was shifted from panel to panel of the viaduct to carry the traveler. This movable truss was one of those designed for the second track, and was left at the viaduct when the work was completed.

The South St. Paul Double Deck Belt Railway Viaduct.

The South St. Paul Belt Railway is about four miles long, and connects the Union Stock Yards in St. Paul with the main lines of the Chicago, Milwaukee & St. Paul and the Chicago, Burlington & Quincy railroads at Newport, Minn., where it crosses the Mississippi River on a steel bridge and viaduct 1632 ft. in total length. The single-track railroad is carried on top of the 440-ft. viaduct, and a highway floor is carried below it with 13 ft. vertical clearance. In consideration of a bonus from Newport township and the city of South St. Paul, the single-track bridge was built wide enough to provide for a highway floor 18 ft. wide in the clear.

The viaduct has 30-ft. towers 80 ft. apart, and between each pair of them are two 40-ft. plate girder spans, supported in the middle by a rocker bent. The viaduct piers are all built up to the same level, and the posts are all vertical, and, except in the end bents, are from about 33½ to 35 ft. in length, varying to suit the grade. The posts are made with two 15-in. channels, latticed, with their webs transverse to the bridge axis, and have 1-in. base plates, 26 in. square, stiffened by three longitudinal gusset web plates, two of which are riveted to the flanges and in the tower posts receive the connection pin for the longitudinal strut and diagonals. In the sides of the tower there are two pairs of 1⅜-in. square diagonal rods in both upper and lower

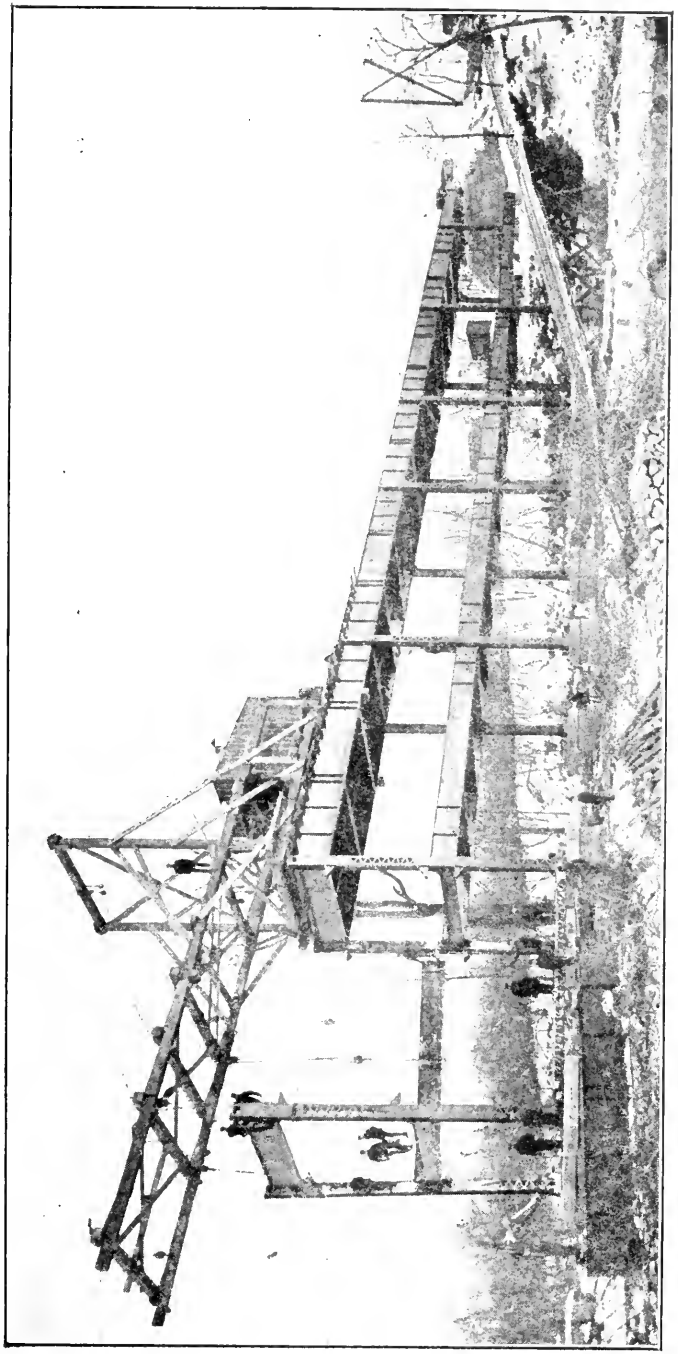

Erection of Double-Track Viaduct.

panels, and in both tower and rocker bents there are two pairs of $1\frac{3}{16}$-in. square diagonals below the highway floorbeam.

The longitudinal girders for both highway and railroad floors are web-connected to the sides of the columns, and are also seated on shelf angles with reinforced horizontal flanges. The highway girders have $3 \times 4 \times \frac{1}{2}$-in. flange angles and $39 \times \frac{1}{4}$-in. web plates in three sections, spliced with two vertical rows of rivets in double cover plates. The railroad girders have two $3\frac{1}{2} \times 5 \times \frac{9}{16}$-in. angles and one $10\frac{1}{2} \times \frac{3}{8}$-in. cover plate $25\frac{3}{4}$ ft. long in each flange and a $54 \times \frac{5}{16}$-in. web plate in three sections, spliced with double cover plates and two vertical rows of rivets. The top flanges of the girders are flush with the tops of the viaduct columns, and are field-riveted to their projecting cap plates. At the single column bents, 110 ft. apart, both roadway and railroad girders have one fixed connection, as already described, and one expansion connection where the rivets through the end vertical stiffener angles are omitted, and the girders are supported wholly by the heavier shelf connections to which they are attached by bolts in slotted holes.

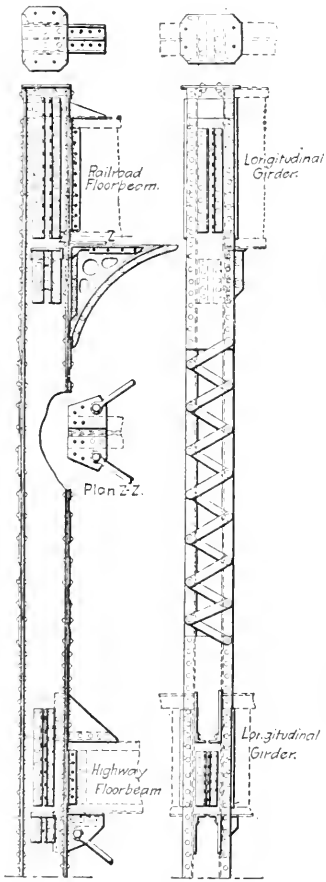

Viaduct Column.

The floorbeams are uniformly $13\frac{1}{3}$ ft. apart, and are connected directly to the viaduct columns and to the main girders at all splices. In the highway floor they have $3 \times \frac{7}{16}$-in. flange angles and $24 \times \frac{1}{4}$-in. web plates; in the railroad floor they have $5 \times 3\frac{1}{2} \times \frac{3}{8}$-in. flange angles and $42 \times \frac{3}{8}$-in. web plates. All of them are web-connected in the usual way to the main girders, with their bottom flanges just clearing those of the main girders, and are connected to them by horizontal lateral-pin plates. Every third floorbeam is web-connected to side plates riveted across the viaduct post flanges, and is also riveted to double-web

top and bottom kneebrace brackets, as shown in the post details. The railroad floorbeams have wide kneebraces with curved flange angles on the under sides, and very short kneebraces, made of pairs of horizontal angles with their 5-in. flanges riveted across the post webs and to the top flanges of the floorbeams, on the upper sides. The highway floor has wooden joists laid on the top flanges of the floorbeams, and the railroad floor has two lines of 20-in. 64-lb. I-beam stringers 8 ft. apart. The stringers are web-connected to the floorbeams with vertical pairs of angles, except at expansion joints, where they are seated without bolts or rivets on shelf angles, and are web-bolted through slotted holes between pairs of vertical angles riveted to the floorbeam webs. All panels in both floors have lateral rods with forked loop eyes and sleeve-nut or clevis adjustments.

The highway floor is proportioned for a live load of 900 lbs. per lin. ft., equivalent to 50 lbs. per sq. ft., and for two 25,200-lb. electric cars, each with two axles 7½ ft. apart and on tracks 9½ ft. apart on centers. The girders are proportioned for a live load of two locomotives with 120,000 lbs. on four axles and a train load of 3400 lbs. per lin. ft., approximately, equivalent to a uniform load of 3800 lbs. per lin. ft. The floorbeams and stringers are proportioned for a live load of 34,000 lbs., each of four axles 5 ft. apart. There are 1-in. lateral rods in the upper deck, but the total wind pressure of 600 lbs. per lin. ft. is assumed to go through the vertical posts.

CHAPTER XXVI

APPROACHES

Rankin Approach

The main line and hot metal track of the Union Railroad crosses the Monongahela River at Rankin, near Pittsburg, Pa., on a double-track bridge with curved plate girder approaches at both ends. A live load of two 192½-ton locomotives, followed by a train load of 5000 lbs. per lin. ft., is assumed for each track.

At one end of the bridge the approach viaduct consists of one 76-ft. plate girder span and twenty-six 30-ft. plate girder spans. All these spans are supported on trestle bents consisting of two vertical columns, a deep transverse girder to which the four longitudinal girders are web-connected, two stiff sway-brace diagonals and a bottom transverse strut, all connections being riveted. The twenty spans nearest the river are on a tangent, and the trestle bents are connected in alternate pairs by longitudinal struts and X-bracing, making every other panel a tower. The remaining seven spans support tracks which are horizontally deflected to a curve of 319½-ft. radius. Here the tower construction is modified by the omission of the longitudinal struts and the insertion of a single kneebrace from the middle of the longitudinal girder to the foot of the trestle column in every alternate panel.

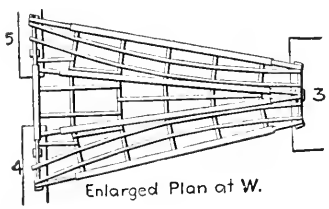

Triangular Span.

At the other end of the bridge there is a triangular platform supported on four very heavy divergent plate girders about 9 ft. deep and nearly 120 ft. long, as indicated by the double lines in the plan. At the end of the 500-ft. span these girders rest on bed plates on the top of the pier, and are connected by heavy floorbeams with two principal sections and four very short lengths, all parallel to the axis of the pier, and oblique to the longitudinal girders. At the opposite ends the two outside

girders rest on the piers and are web-connected to a floorbeam about 70 ft. long, parallel with the axis of the two piers. This floorbeam is supported on the masonry by a shoe about 14 ft. from each end, and thus forms a continuous girder supported at four points. Between the shoes and the ends the floorbeam is only 5 ft. deep, and receives the track stringers across its upper flange; between the shoes it is 9 ft. deep, and has web connections to the two inside main longitudinal girders and to the stringers.

The main longitudinal girders are connected together by four lines of intermediate transverse girders 5 ft. deep, which are web-connected to them about midway between the top and bottom flanges, and carry the 30-in. stringers across their top flanges. These intermediate floorbeams are not parallel to the end floorbeams, but those in each set are approximately on chords of arcs concave toward the 500-ft. span. They have solid-web kneebraces with flange angles from each end to the bottom flange of the main girder, and similar braces from the upper sides of the top flanges to the top flanges of the stringers. On account of the curvature of the tracks which they support, the stringers are not in straight lines, but form chords which start near one girder at one end of the span, cross over close to the other girder at mid-span, and return to the first girder at the opposite end of the span. Additional stringers are interpolated between the track stringers and between the center main girders to form a support for a continuous I-beam floor over the whole of the triangular space between the three masonry piers nearest the end of the 500-ft. span.

One of the main girders is $116\frac{1}{2}$ ft. long over all, and the others vary slightly from it in length. Each is made with 107 $\times \frac{9}{16}$-in. web plates in sections 15 ft. long, spliced with three sets of double plates giving long top and bottom lines of rivets as shown in the elevation of a typical panel of the girder (see p. 225). Each flange is composed of two $8 \times 8 \times \frac{7}{16}$-in. angles, two $16 \times \frac{5}{8}$-in. vertical side plates, and a maximum of five $24 \times \frac{7}{8}$-in. flange cover plates. Each side plate and angle in the flange is made in two pieces with the joints arranged so that no two are close together, and each is spliced by a short cover piece of the same section. The vertical web stiffeners are crimped 6×4-in. angles about 10 ft. apart. The girders have fixed bearings at one end, and are seated on expansion rollers at the other end.

The spans between piers 5–7 and 4–6 are essentially duplicates, and each has a pair of parallel 9-ft. girders 120 ft. long over all, set on a considerable skew and connected together by floorbeams and kneebraces as shown in the cross-section, which illustrates the general features of arrangement of a pair of girders in the triangular platform already described. In this span there is a lateral system of X-braces riveted to the bottom flanges of the stringers and the top flanges of the floorbeams. As these spans are on a considerable grade, there are wedge-shape bed plates riveted to the lower flanges at the ends for bearings on the roller nests, and masonry plates at the expansion and fixed ends respectively.

Between pier 7 and the abutment, and between pier 6 and

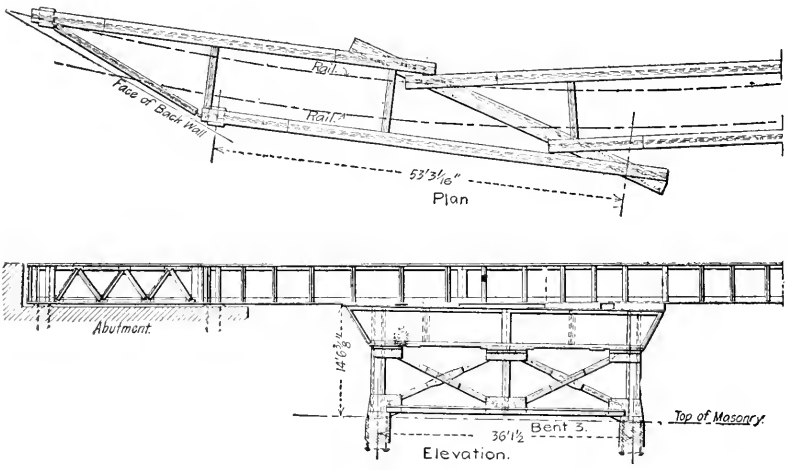

End Spans of Intersecting Girders.

the abutment, the single tracks are carried directly by pairs of longitudinal girders, without floorbeams or stringers. In each case they are arranged in three skew spans, the middle one and the adjacent ends of the others being supported on very oblique trestle bents. The trestle bent has a double-web plate girder 2 ft. deep, connecting the tops of the two vertical posts and supporting across its top flange the ends of the longitudinal girders which lap far past each other. The grade of the longitudinal girders is provided for by wedge-shape cast bed plates on the column caps. The girders are only 5 ft. deep, and in order to bring their top flanges to the required heights at piers 6 and 7 they are seated there on bolsters $4\frac{1}{3}$ ft. high, which are

made by riveting bed plates, a web plate and stiffener angles to the bottom flange of the girder, so as to have the effect of extending the girder web below the lower flange and making it act as a longitudinal kneebrace with inclined flange stiffening angles.

Bridesburg Approach. — The approaches of the Pennsylvania & New Jersey Railroad bridge across the Delaware River at

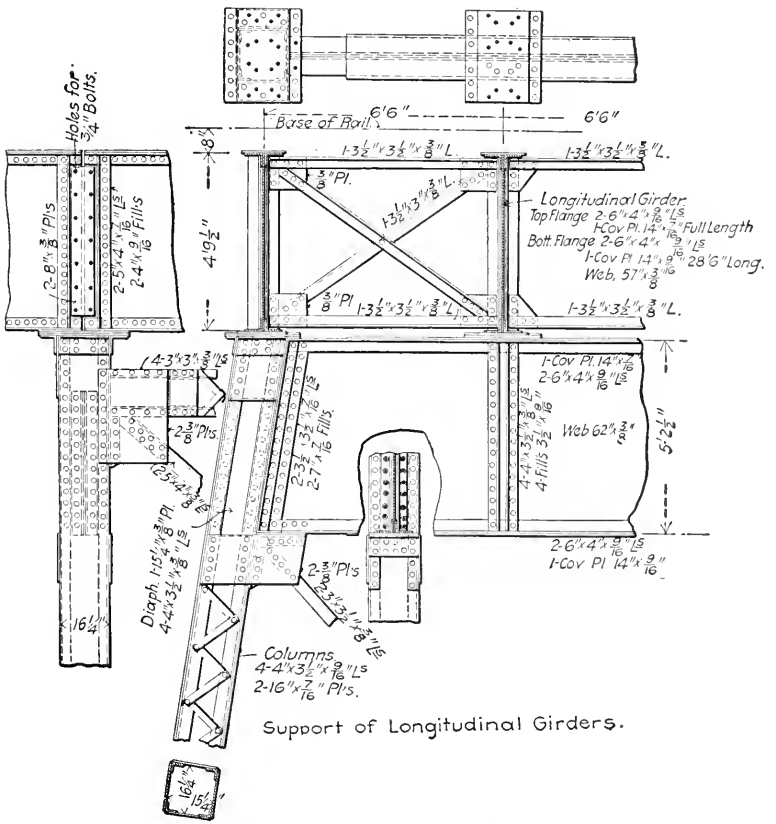

Details of Girder Connections.

Bridesburg, Philadelphia, are double-track steel viaducts of about 3450 ft. total length. The regular spans have four lines of 40-ft. plate girders supported on the tops of the trestle columns and on transverse girders web-connected to the latter. The ties are laid on the top flanges of the longitudinal main girders, and there are no floorbeams. The transverse girders have their ends beveled to fit the batter of the trestle posts and are web-

connected to them. Their top flanges are flush with the post caps, and the bottom flanges are seated on solid-web brackets which serve as knee braces and as connection plates for the trestle sway-bracing. The brackets have double webs made by

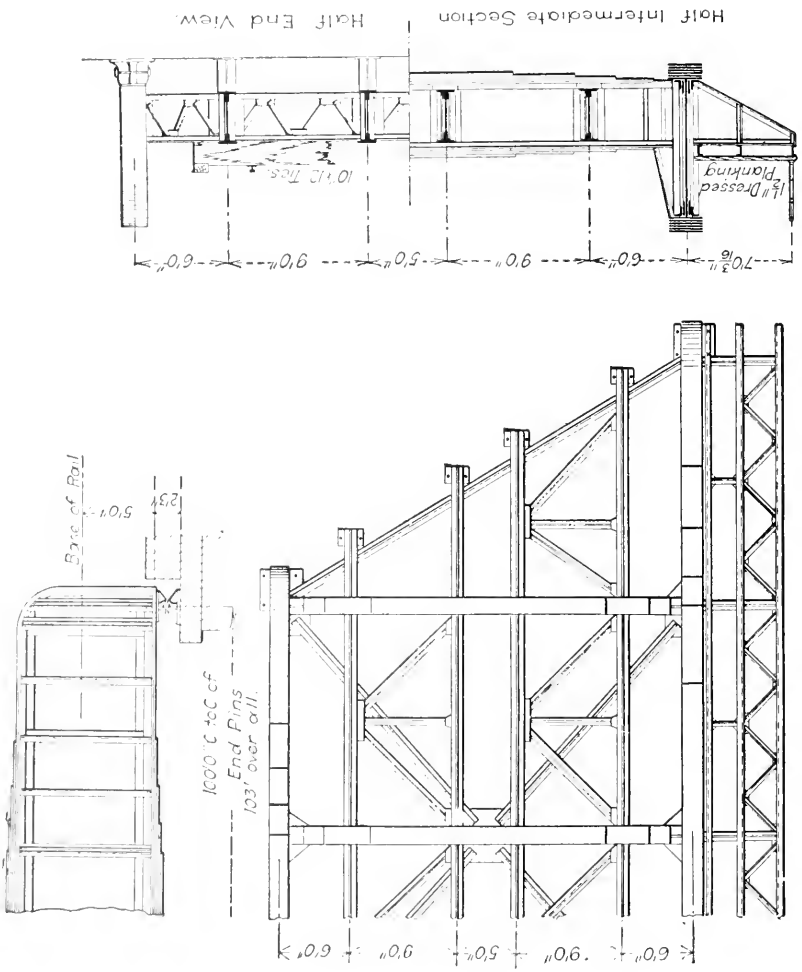

Steelwork Details of the Plate-Girder Approaches of the Clairton Bridge.

extensions of tie plates riveted across both flanges of the posts, forming jaw plates to receive the sway-brace struts. The fixed ends of the longitudinal girders are field-riveted to base plates, which are shop-riveted across the top flanges of the transverse girders and reinforced by the bearings of the girder flanges on

the tops of pairs of web-stiffener angles. The end web-stiffener angles of the longitudinal girders are set back about $4\frac{1}{2}$ in. clear of the ends, and the webs of adjacent girders are spliced by pairs of 8-in. field-riveted cover plates. At the expansion ends the field rivets are replaced by bolts in slotted holes, and the lower flanges of the girders are fitted to slide between guide strips riveted to the base plates. The shop and field work in this floor system is less than if the girders had been web-connected, and the structure has shown little vibration under heavy traffic.

Clairton Approaches.

The double-track railroad bridge across the Monongahela River at Clairton, near Pittsburg, is designed largely for steel mill traffic, and is of unusually massive construction, proportioned according to the specifications of the Pittsburg & Lake Erie Railroad. It has a 498-ft. channel span, at each end of which there is a viaduct approach with center lines curved to a radius of about 475 ft. These viaducts have masonry piers 8 ft. wide under the coping, which support three plate girder spans on each side of the river. At the east end of the bridge the girders are from 103 to 117 ft. long, and at the west end from 86 to 117 ft. long. The abutment spans are through girders and the others are deck girders.

On the west side of the river the tracks from the mills and from the Pittsburg & Southwestern Railway arrive at the river crossing from opposite directions, and converge to the channel span forming a Y. The superstructure, as now constructed, comprises only the approach from the mills, and the viaduct at this end of the bridge has only single-track spans. The pier between spans Nos. 2 and 3, however, is built to accommodate the future span for the north leg of the Y.

On the east side of the river both tracks leave the bridge in the same line, and the approach has two single-track deck spans, Nos. 5 and 6, and one double-track span, No. 7. Although the piers have been built for double track, the superstructure has not yet been provided for the second track for spans 5 and 6, this being deferred until the second track is required. Span 7 is of through girder type, in order to give clearance underneath for the tracks of the Pittsburg & Lake Erie Railroad, and was built double-track for the purpose of securing a better alignment

of the second track whenever it may be added, than if two complete single-track spans were used.

All the spans have been built for the same loading as the

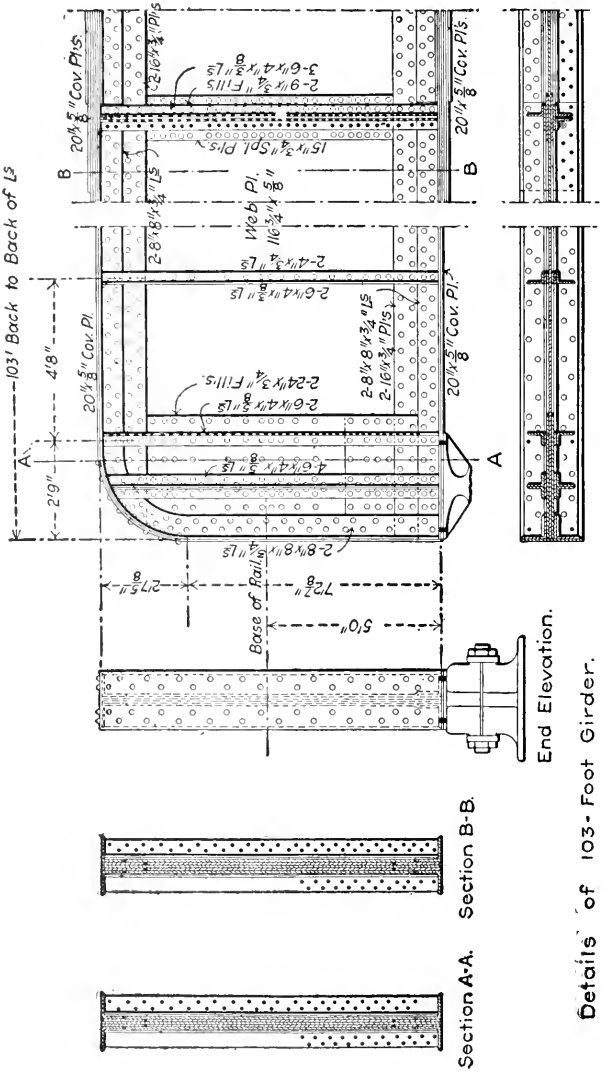

Steelwork Details of the Plate-Girder Approaches of the Clairton Bridge.

channel span, namely: one 152½-ton engine followed by a train load weighing 5000 lbs. per lin. ft. The dead load was assumed to be 2200 lbs. per lin. ft. The track is on a 12-degree curve with the center line 21 ft. from the center of the inside girder

at the end. Allowance has been made, consequently, for the centrifugal force due to a train speed of 30 miles an hour, which was considered as equally divided between the top and bottom flanges. Spans 3 and 5 are nearly duplicate, and each is 113 ft. 8 in. long on centers of piers, and 116 ft. long from out to out of girders. The girders are of soft steel, which, above $\frac{3}{4}$ in. thickness, was reamed after punching.

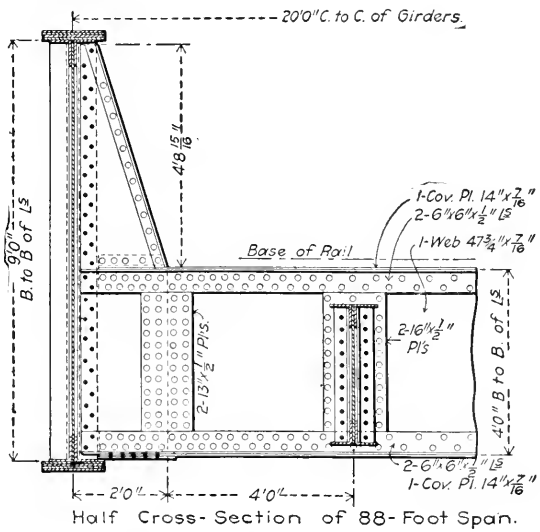

Steelwork Details: Clairton Bridge.

The outside girder has maximum moments of flexure as follows: Dead load, 888,200 ft.-lbs.; live load, 5,227,800 ft.-lbs.; centrifugal, 576,500 ft.-lbs.; total, 6,692,500 ft.-lbs. This gives a maximum flange stress of 691,400 lbs., which, at 8500 lbs. per sq. in., requires a net section of 81.34 sq. in. This section was made up of $8 \times 8 \times \frac{3}{4}$-in. angles and five $24 \times \frac{5}{8}$-in. cover plates having a combined area of 82.38 sq. in. The maximum flange stress and the net area of the inside girder are respectively 559,700 lbs. and 69.88 sq. in. The dead load shear is 62,500 lbs., live load shear 178,700 lbs., giving a maximum of 241,200 lbs., which, at 4000 lbs. per sq. in., requires a total web area of 60.3 sq. in. The $\frac{5}{8}$-in. web exceeds this amount and has an area of 73.1 in. The web is stiffened by the splice plates from 9 to 12 ft. apart and by intermediate pairs of vertical $6 \times 3\frac{1}{2}$-in. angles and fillers, both of which are finished to bear on the flange angles. At every web splice, that is, at every alternate panel point, the girders are braced together by sway frames, and the panels between the sway frames are X-braced by top and bottom laterals. These are single or double angles $3\frac{1}{2}$ or 4 in. wide, riveted to horizontal connection plates engaging the inner edges of the cover plates.

The vertical flanges are turned down in the top laterals and up in the bottom laterals. One diagonal is made continuous, and the other diagonal is cut to clear it and spliced across it by a horizontal flange plate, shop-riveted to it and field-riveted to the continuous angles. The connection plates are shop-riveted to one of the diagonals and field-riveted to the sway-brace frames, the other diagonals and the main girders. From the south girder of each span, long cantilever open brackets project at alternate main panel points to carry a footwalk a considerable distance clear of the girders. This walk is parallel with the girders, except in the end panel where it is divergent, as indicated in the diagram.

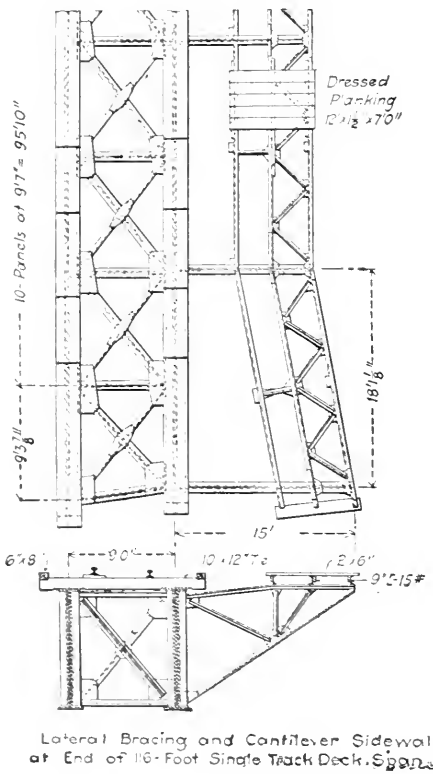

Lateral Bracing and Cantilever Sidewalk at End of 16-Foot Single Track Deck Span No. 3

Steelwork Details: Clairton Bridge.

The main girders are 7 ft. apart in the clear, and support the track ties on their upper flanges. The web splices are made with a pair of 13 × ½-in. plates, two angles and two fillers, and all of them were riveted up complete in the shops, the girders being shipped whole to the site. At the ends of the span the web is reinforced by two 28 × ¾-in. and two 24 × ½-in. plates, besides the six vertical 6 × 3½-in. angles, and is seated on cast steel pedestals with pin bearings. At one end of the span the upper flange extends 12 in. beyond the end of the girder, and is supported by solid-web kneebraces to carry the ties over to meet the track on the adjacent span. The track ties are dapped a variable amount equal to the thickness of the cover plates so that their lower edge is always flush with the top of the flange angles. The outer rail is raised by oak wedges.

The girders have cast steel shoes and pedestals (see p. 185)

with half-ball bearings on 5-in. pins; at the expansion ends the pedestals are seated on rollers with special bed plates; at the fixed ends the pedestals are seated directly on the masonry, which is built higher to receive them.

The through spans at the shore ends of both approaches are similar, except that one of them is for single and the other for double track service. In both of them the general character

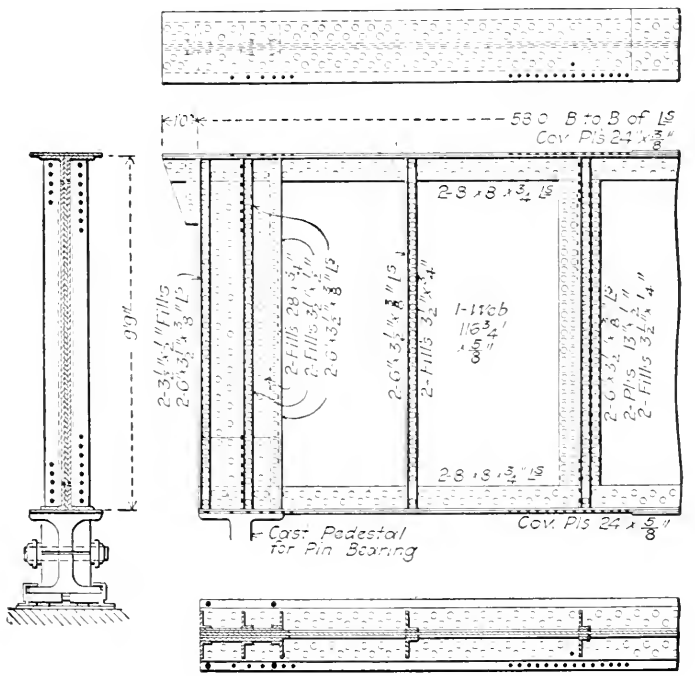

End of Deck Plate Girder Spans 3 and 5

Details of Girders.

of the main girders corresponds with those of the deck spans already described, except that the upper corners are rounded to a radius of $2\frac{1}{2}$ ft.; that there are no upper lateral struts or sway-bracing, and that there are floorbeams about 19 ft. apart in the double-track spans, and 17 ft. apart in the single-track spans, web-connected to the main girders with gusset plates, which form the end sections of the floorbeam webs and have a height equal to the full depth of the main girders. Both spans are considerably skewed and carry a parallel sidewalk cantilevered

out from the main girders on solid-web brackets about 7 ft. long. The general system of bracing in the double-track span is shown by the plan, elevation and cross-section diagrams of the end panel. In the 103-ft. double-track through span the girders have a $\frac{5}{8}$-in. web 9 ft. 9 in. deep, and a maximum flange section composed of two $8 \times 8 \times \frac{3}{4}$-in. angles, two $16 \times \frac{3}{4}$-in. web plates, and six $20 \times \frac{5}{8}$-in. cover plates. There are four lines of rivets in the web connection to the flange, and four lines through the cover plates and horizontal legs of the flange angles.

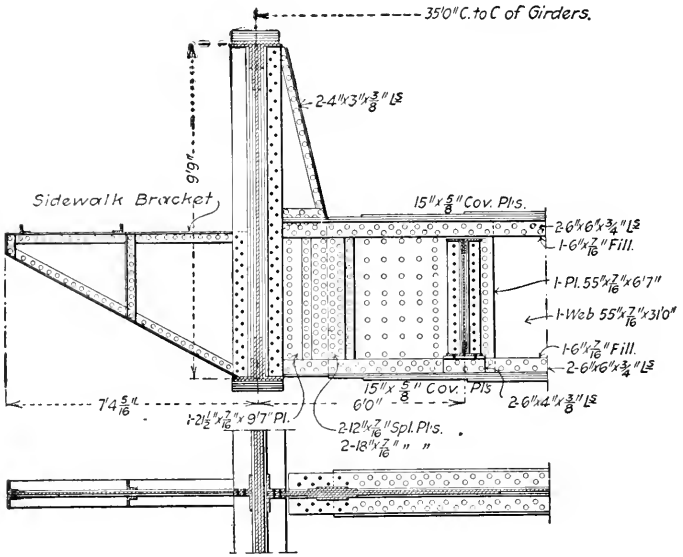

Part Cross-Section of 103-Foot Span

Sidewalk Bracket on one side of Bridge only.

Details of Girders.

The ends of the girders are connected by oblique lattice girder struts riveted to the stringer webs. The ends of the end stringers are supported on riveted pedestals seated on the abutment masonry. The top chord angles terminate at the rounded corners, and the vertical end flange angles are made continuous from the lower flange around the curved corners to a tangent with the top flange angles, thus avoiding the bending of the long angles. The girders are supported on pedestals and pin bearings corresponding with those of the deck spans. The connection at each end of each floorbeam has forty-four

$\frac{7}{8}$-in. field-driven rivets in double shear, and each stringer has twenty-six $\frac{7}{8}$-in. rivets at each connection. The intermediate stringers have a 41 × $\frac{9}{16}$-in. web and pairs of 6 × 6 × $\frac{9}{16}$-in. flange angles without cover plates or web stiffeners. The single-track through span corresponds closely to the double-track span as above described, except in the height of the girders which are only 9 ft., in the cross-sections of their flanges and in the length and depth of their floorbeams.

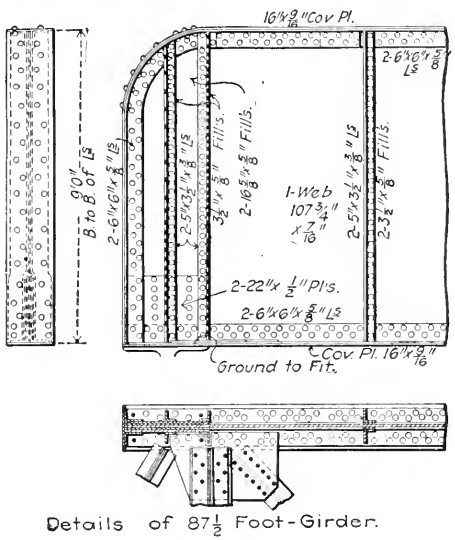

Details of 87½ Foot-Girder.

The weight of the 116-ft. single-track deck span is 268,000 lbs. The weight of one 103-ft. double-track through girder is 118,000 lbs., and the weight of the complete span is 415,000 lbs. All girders were shipped whole and separately to the site, where they were run to position on tracks carried by trestle falsework. They were unloaded and set in position on the falsework by an ordinary tower traveler, and the lateral bracing and floor systems were assembled and field-riveted by pneumatic hammers.

Fraser River Bridge Approach.

The Fraser River Bridge at New Westminster, British Columbia, Canada, has a total length of about 2000 ft. and carries a highway, and steam and electric railways across the river at a point where the latter is nearly 2000 ft. wide and has a maximum depth of about 80 ft. and a tidal current of 5 miles an hour.

The bridge has two decks. One of them is at the level of the top chords of the 159-ft. spans, and is far enough below the top chords of the other spans to give suitable clearance in the overhead lateral system. The other deck is carried at the level of the lower chords, which are in the same plane in all spans. The lower deck carries a single-track railway, which is

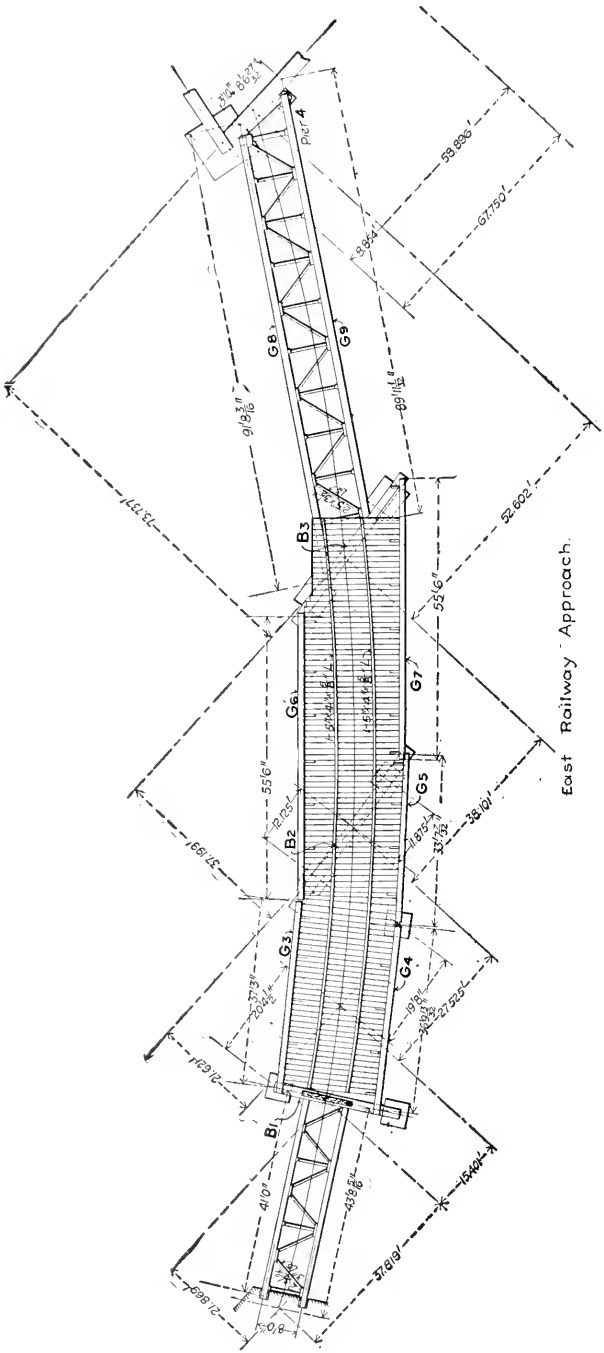

Detail Plan of East Railway Approach.

also used by an electric car line. At the west end of the bridge these two tracks commence to diverge. From the shore end of this span there are three separate plate-girder approach viaducts. One of them on the axis of the bridge carries the highway; the others are curved structures carrying the railroad tracks to the abutments. The viaducts are made with both deck and half-through plate girders with spans of from 35 to 96 ft. The grade of the highway deck is maintained nearly level from the west end of the bridge to the top of the bank, but at the east end it diverges from the parallel approach and electric tracks and descends to the surface of the ground.

The highway approach has three deck plate-girder spans 57 ft. $6\frac{1}{4}$ in. long over all, and 54 in. deep. The girders are spaced 10 ft. apart on centers and have 12 × 12-in. wooden floorbeams 20 ft. long dapped over their top flanges and secured to them by hook bolts. These carry nine lines of 3 × 12-in. stringers covered with a diagonal course of 2-in. planks and an upper transverse course of $2\frac{1}{2}$-in. planks. The roadway is 16 ft. wide in the clear, and is protected by wooden hand rails kneebraced to the cantilever ends of the floorbeams. The girders have zigzag top lateral braces, and are supported by single-trestle bents, each made with two battered posts. The posts are bent so that their upper ends are vertical and are field-riveted to the end web-stiffener angles of the girders. The feet of the posts are anchorbolted to masonry piers, and some of them are inclosed in sectional circular cast iron shells which are filled solid with concrete.

From the river end of the approach proper to the 380-ft. span, the deck is carried on a continuation of the plate girder viaduct supported by the special floorbeams of the 225-ft. spread span. These floorbeams are about 45 ft. apart, and are from about $20\frac{1}{2}$ to about $135\frac{1}{2}$ ft. long on centers of trusses. On the center of each floorbeam there is seated a single bent with two vertical posts about 24 ft. high carrying the pair of roadway girders. On the first three floorbeams at the shore end the bents are made with pairs of vertical posts 10 ft. apart on centers and X-braced in two vertical panels with pairs of angles latticed. Each column has an I-shaped cross-section made of two pairs of 4 × 3-in. angles latticed in the longitudinal plane. The ends of the girders are web-connected to the column flanges, and the latter are sway-braced with the usual angle frames between the girders. On the remaining three floorbeams

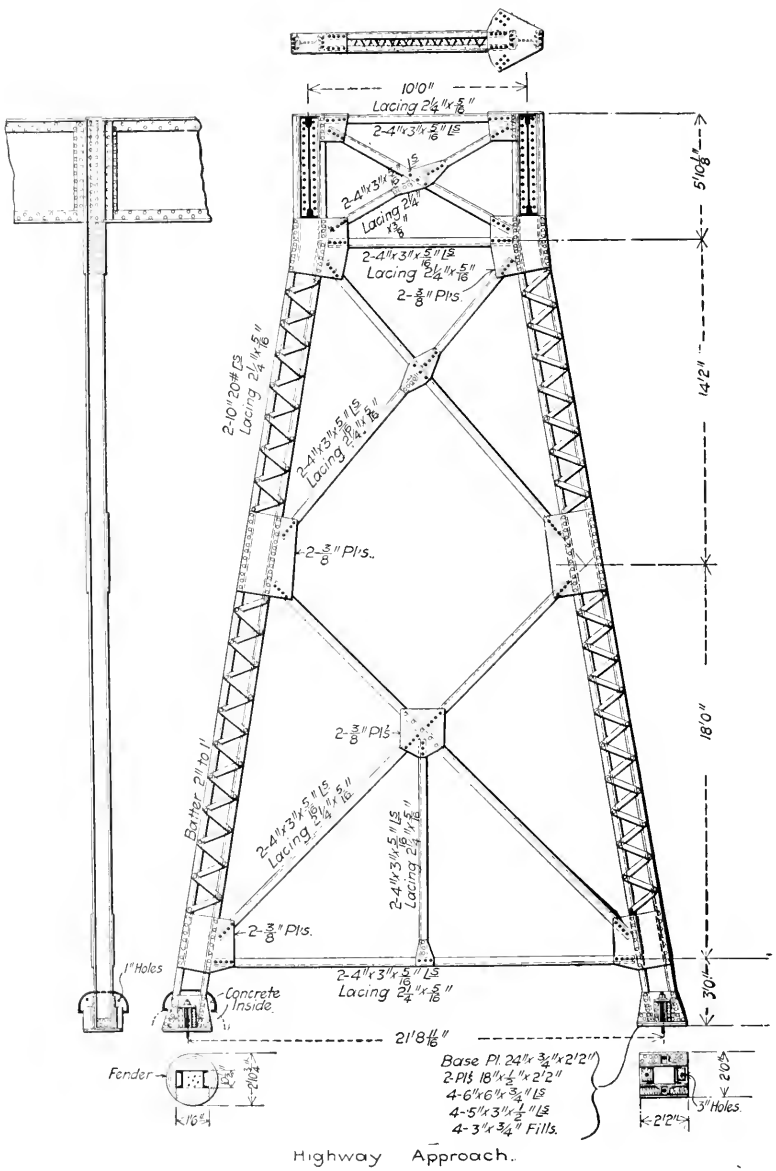

Cross-Section of Highway Span.

of this span the columns supporting the highway girders are spaced from 19 to 35 ft. apart in order to clear the railroad tracks. In these bents they are made of pairs of 9-in. channels latticed, and their upper ends are web-connected to 40-in. transverse plate girders with angle-iron kneebraces at both ends. The longitudinal roadway girders are supported from the transverse girders with web-connections like those usually found between stringers and floorbeams. The two divergent railroad

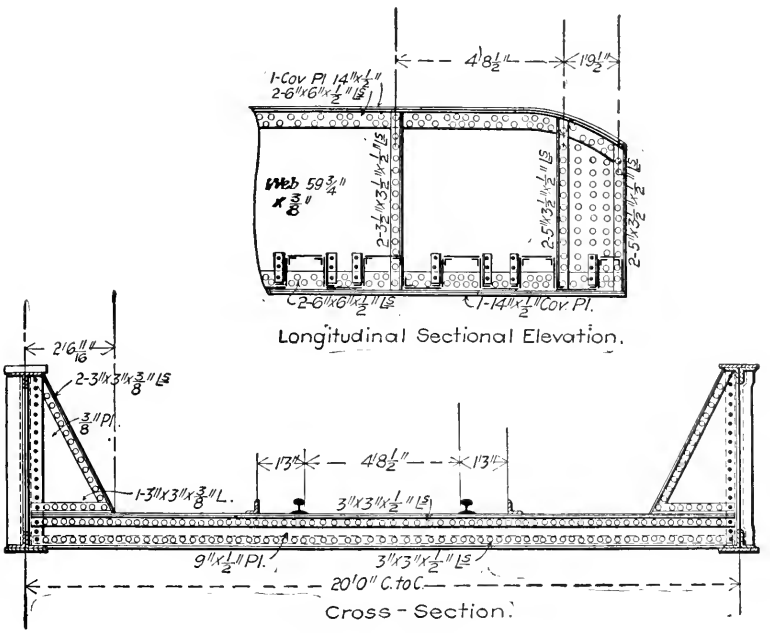

Solid Floor Span.

tracks have pairs of skewed longitudinal girders directly connected to the floorbeams, as indicated in the general diagram.

From the shore end of the 225-ft. span each curved track is carried on pairs of skewed plate girders supported by special single-bent trestles with their vertical posts connected at the top by heavy transverse girders. At the abutments and at the piers of the 225-ft. span the tracks are carried on deck spans, but in the middle of each approach they are carried on through spans with solid trough floors to afford the greatest possible clearance underneath for the low-grade roads, which they cross. The arrangement of the trestles and girders is substantially

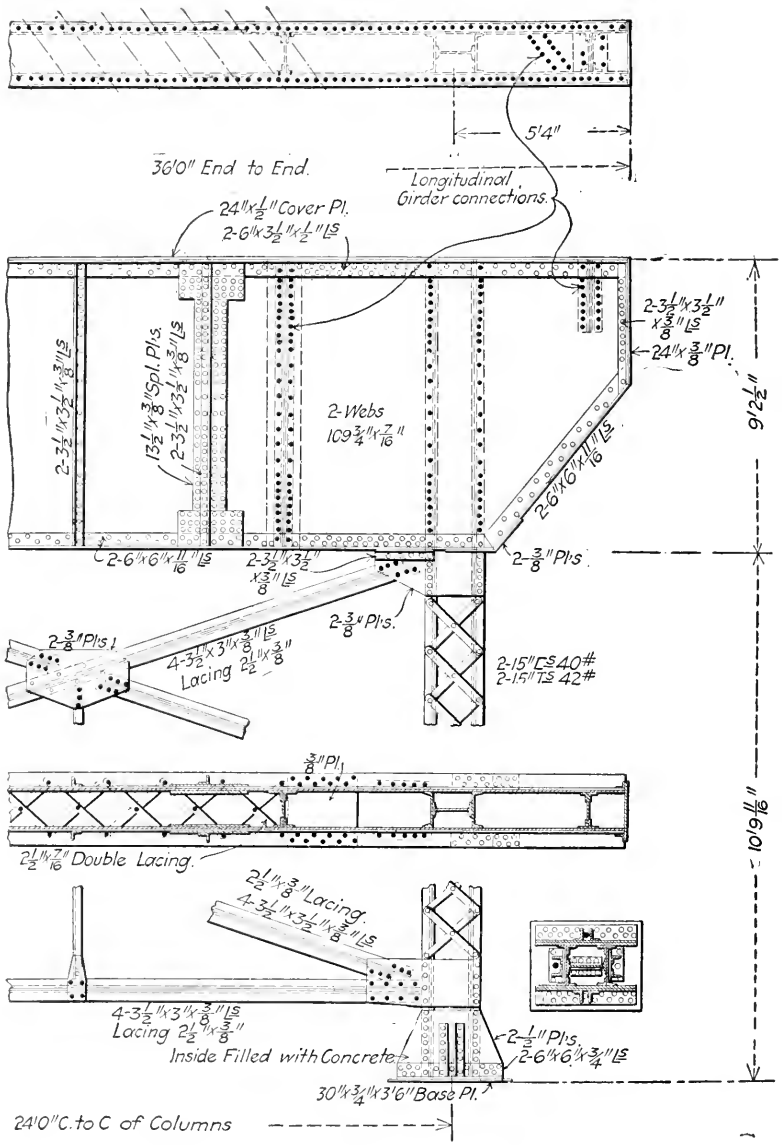

Half Elevation of Bent E B3.

Transverse Girder.

alike for both tracks, and is indicated by the diagram for the east track. That for the west track corresponds to it in general, except that the girders are supported entirely by three trestle bents, and the intermediate single column, seen under the east track, is there omitted. Bent B3 has a very deep double cantilever transverse girder with two web plates, each made in three sections, shop-spliced and field-riveted across the flanges of the vertical posts which act as spacers between them and extend to their top flanges. The ends of the through girders, G6 and G7, are carried on the extremities of the top flange of the transverse girder, and at these points the webs are connected by vertical diaphragm plates to distribute the loads and form seats for the longitudinal girders. The ends of the deck span girders, G8 and G9, are web-connected to the transverse girder at points adjacent to the web splices, where the webs are connected and stiffened by vertical diaphragms shop-riveted to one web and field-riveted to the other. The end and top flange angles of the transverse girder have cover plates, and the latter, as well as the lattice-bars on the lower flange, are field-riveted to allow for separate shipment and field assembling.

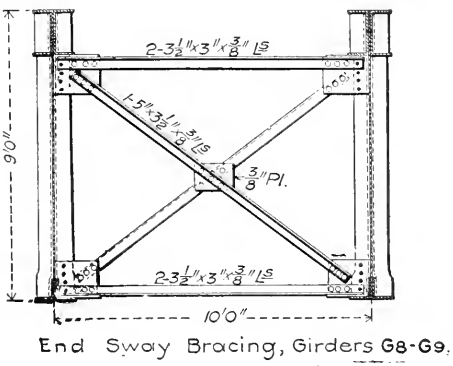

Transverse Section.

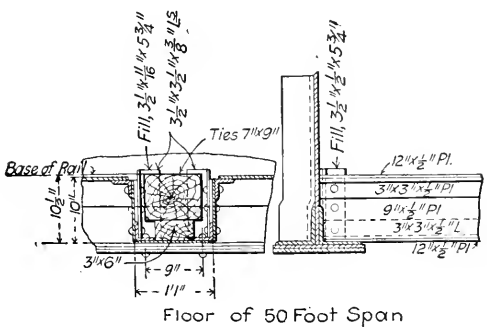

Floor Detail.

Bent B2 is similar to B3, but differs in dimensions and proportions. The columns are 24 ft. apart on centers, and the transverse girder is 39 ft. long over all and 57 in. deep, each of

its webs being made with single plates. It has no web-connections to the longitudinal girders, but supports them all on reinforced seats at the extremities of the upper flange. Bent B1 has a box girder shipped complete. Its webs are field-riveted to the flanges of the columns, which extend through it to the top flange, as in the case of the other bents. The columns, however, have heavy double-web brackets shop-riveted across their flanges to form seats for the girder which is field-riveted to them so as to secure lateral rigidity, which is equivalent to kneebraces.

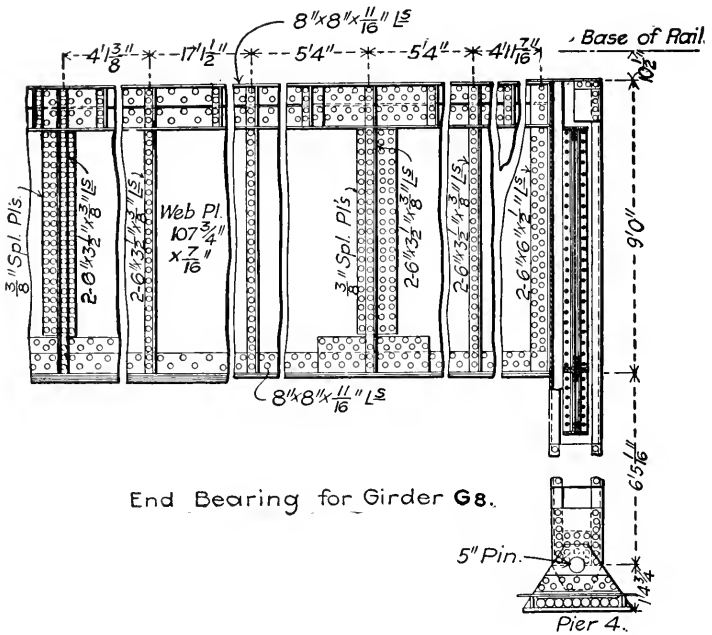

Girder with Rocker Bent.

The through span girders are supported on the tops of the columns, and the deck span girders are web-connected to the transverse girder at the points stiffened by the diaphragms. There is no material difference, except in dimensions, between the trestle bents for the west track approach and those for the east track approach.

The longest railroad girders are those adjacent to the 225-ft. span. Those for the west track are both $71\frac{1}{2}$ ft. long over all, and correspond in most respects to girders G8 and G9 for the east track, which are respectively 91 ft. $8\frac{3}{16}$ in. and 89 ft.

$11\frac{1}{32}$ in. long over all. They are made with two angles in the lower flange and with four in the upper flange, and have their details and materials throughout corresponding to those shown in the end sections. The top flange has a uniform section throughout, which is composed of four $8 \times 8 \times \frac{11}{16}$-in. angles without cover plates. The bottom chord has a maximum cross-section of two $8 \times 8 \times \frac{11}{16}$-in. angles and three 16-in. cover plates aggregating $1\frac{3}{8}$ in. in thickness. The web plates are made in sections from about 7 to 14 ft. long, and are spliced with double cover plates and four rows of vertical rivets, except

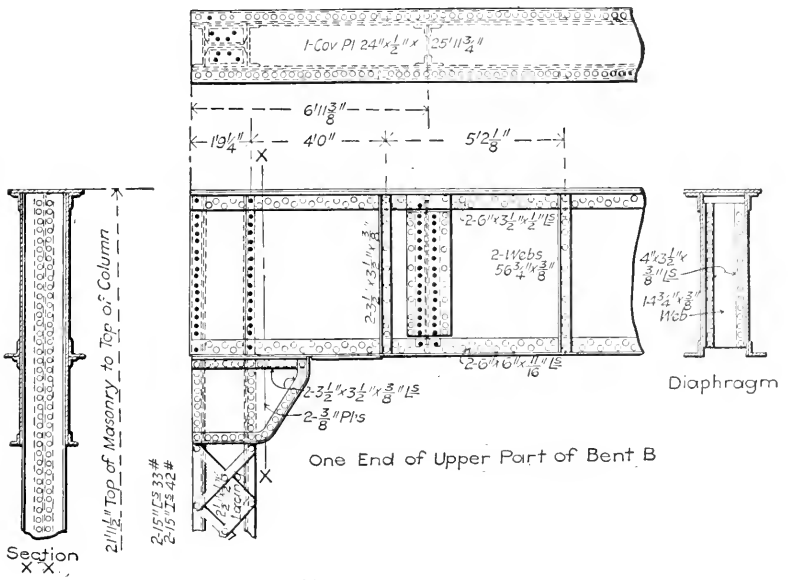

Transverse Bent.

at the bottom flange, where longer horizontal splice plates are used, as shown in the detail. The horizontal flanges of the upper and lower top flange angles are braced by vertical angles about 2 ft. apart, which are riveted to the webs and have both ends milled to bearing.

At the shore ends both girders have pairs of bent vertical plates shop-riveted to their webs with three vertical lines of rivets. These make oblique flanges which are field-riveted to the web of the transverse girder in bent B3. The river end of girder G8 is field-riveted through the flanges of its end web-stiffener angles to the flange of a vertical post about $15\frac{1}{2}$ ft.

long which project $6\frac{1}{2}$ ft. below the lower flange and there has a pin connection to a roller shoe seated on the pier of the 225-ft. span. The river end of girder G9 is several feet beyond the pier of the 225-ft. span, and is carried directly by the long end floorbeam of that span. In order to engage it, the girder is made with a drop end, and has riveted to the lower flange a cast steel shoe, pin-connected to a cast steel pedestal seated on a roller nest in a pocket of the floorbeam. Girders G8 and G9 are connected together by zigzag lateral bracing and by panels of sway-brace angles about $8\frac{1}{2}$ feet apart. At the river

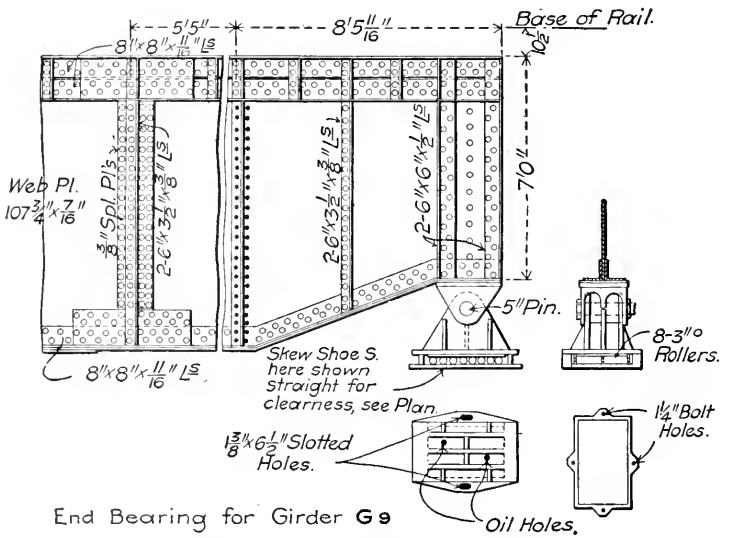

Expansion End of Long Girder.

end the sway-brace frame is replaced by a solid transverse diaphragm made with a 90 × $\frac{3}{8}$-in. plate and pairs of $3\frac{1}{2} \times 3\frac{1}{2}$-in. angles on all sides. This diaphragm has a solid-web kneebrace at one end to extend its connection with the vertical post to which it is field-riveted, as shown in the elevation of the end of the girder.

The west track girders adjacent to the 225-ft. span are similar to G8 and G9, except in their dimensions, and in the fact that the girder, which is seated in the floorbeam pocket, being only 84 in. deep, does not require to be made with a drop end. The through span girders, G3, 4, 5, 6 and 7, are of ordinary construction, made with rounded upper corners and having

the ends of the web plates reinforced, as indicated in the part elevation. These spans have neither floorbeams nor stringers, and their girders are connected only by the solid trough floor which is shop-riveted in sections about 4 ft. wide and is field-riveted to the girders through short vertical angles shop-riveted to each side plate. The floor is made continuous across both through spans, and the sections are beveled to fit where they intersect on account of the different angles of adjacent girders. The girders are knee-braced, by wide gusset plates reaching to the top flanges and riveted to the floor troughs and to each vertical web-stiffener angle. Each trough contains a tie supported on a 3 × 6-in. packing timber laid flat on the bottom plate. The space around the ties is filled with gravel ballast saturated with asphalt.

Williamsburg Bridge Approaches, 4244 ft. × 90 ft.

The viaduct approaches for the Williamsburg suspension bridge, across the East River, New York, are probably the largest and most important structures of their class ever built. They are double-deck plate girder structures, with a capacity for two elevated railroad and four electric car tracks, two 24-ft. roadways, two sidewalks, and two bicycle paths. They have an aggregate length of 4244 ft., and a weight of 18,000 tons. They are built on a tangent, with a grade of about 3 per cent. The regular spans are about 62½ ft. long, and are supported on four lines of steel columns from 10 ft. to 80 ft. high, which are braced to make alternate towers and open panels. Street crossings are made with plate girder deck spans from 58 to 90 ft. long.

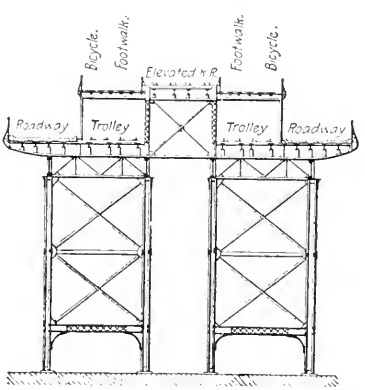

General Cross-Section.

At the Attorney Street crossing six longitudinal 58-ft. plate girders, 6 ft. deep, carry the roadway, trolley and bicycle tracks on solid steel floors of transverse Pencoyd trough sections, and the two middle girders each carry two columns of the elevated railroad viaduct. At the Ridge Street crossing there

are six 6½-ft. plate girders, seated on the approach masonry at the west end, and on steel columns at the east end. The outer ones, 114 ft. apart, are 87 in. deep; the inner ones, 22 ft. apart, are 82½ in. deep and extra heavy to carry in the middle two columns each of the elevated railroad. The intermediate girders, 69 ft. apart, are also 82½ in. deep. The span is divided into three panels by web-connected plate girder floorbeams, which are 55½ in. deep under the roadway, and 48 in. under the trolley tracks. The plate girder stringers are web-connected to the floorbeams, braced by transverse lattice frames,

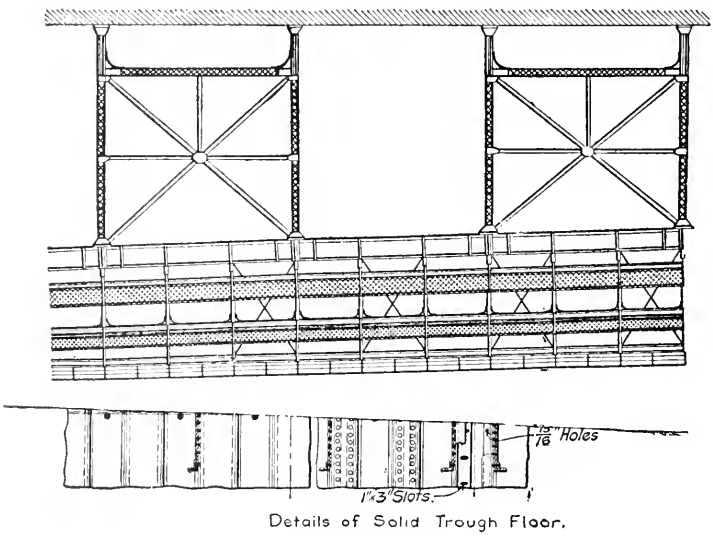

Details of Solid Trough Floor.

General End Elevation.

and covered with steel buckle plates, which are paved for the roadway and ballasted for the trolley tracks. On each side of the center line at the east end of the span the ends of the outside and intermediate girders are web-connected to a transverse girder 10 ft. deep, in the middle of which the outer girder of the regular viaduct is web-connected.

There is a 90½-ft. span over Mangin Street, adjacent to the anchorage pier. It has six longitudinal girders 9½ ft. deep, with 8 × 6 × ⅝-in. chord angles and three 19 × ⅞-in. reinforcement plates on each flange. The fixed end of each girder rests on the pier, and the other end slides on the cap of the viaduct column, which also supports, at the same level, the bottom flange of the

regular longitudinal girder 6½ ft. deep. The upper part of the end of the deep girder is cut to clear the elevated railroad column, which rests on a seat on it and on the top chord of the shallower girder to which it is riveted and braced by a gusset plate, while the long girder slides freely under it. The lower chords and the lower parts of the webs of the floorbeams resting on these deep girders are cut to clear their top chords. The top chord of the floorbeam is reinforced over its intersection with the outer longitudinal girder, and it has double bearings on it, one by a seat riveted to its web and engaging the top flange of the girder, and the other by a shelf riveted to the girder web, on which the floorbeam lower chord is seated.

Up to the Ridge Street crossing the elevated railroad viaduct is a separate structure of 40-ft. 2-in. plate girder spans on column bents without longitudinal bracing. The columns are made of pairs of latticed channels, braced transversely by floorbeams, struts, and diagonal angles. They are 22 ft. apart on centers, and their tops are flush with the top chords of the 68½-in. transverse plate girders, to which they are web-connected. The two tracks are 11 ft. apart on centers, and are each carried on a pair of 57-in. plate girders, 6½ ft. apart. The longitudinal girders are connected by cross-frames in the middle and by zig-zag angles between the bottom chord angles of each pair. Wooden ties rest on the top chords and are continuous across both tracks. Each line of longitudinal girders has a fixed and an expansion end adjacent at about every third span, and all their other seats are fixed. At the expansion joint a cast saddle is riveted between two vertical web stiffeners of the transverse girder, and the longitudinal girder is seated on it.

From Ridge Street to Mangin Street the structure is a steel viaduct with 32 regular 62½-ft. spans, supported by four longitudinal rows of vertical columns spaced symmetrically, 11 ft. and 43½ ft. from the axis on each side of the bridge. Each transverse row of columns is braced in two separate bents, which are united only at the top by the transverse girders and sway-bracing of the elevated railroad, and, in some instances, of the footwalks and bicycle paths, which are carried by the two inside rows of columns. Longitudinally the columns are braced to form alternate towers and open panels, except where the height is smallest in the 14 panels nearest the masonry approach, which are unbraced below the roadway level. All the columns have rectangular cross-sections, with two 24-in. web plates and four

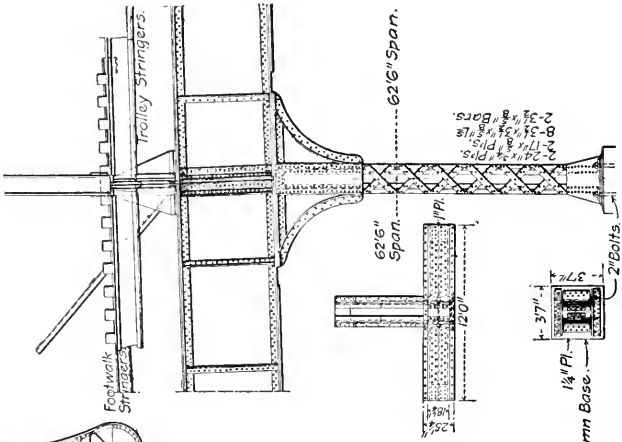

Detail of Longitudinal Girder.

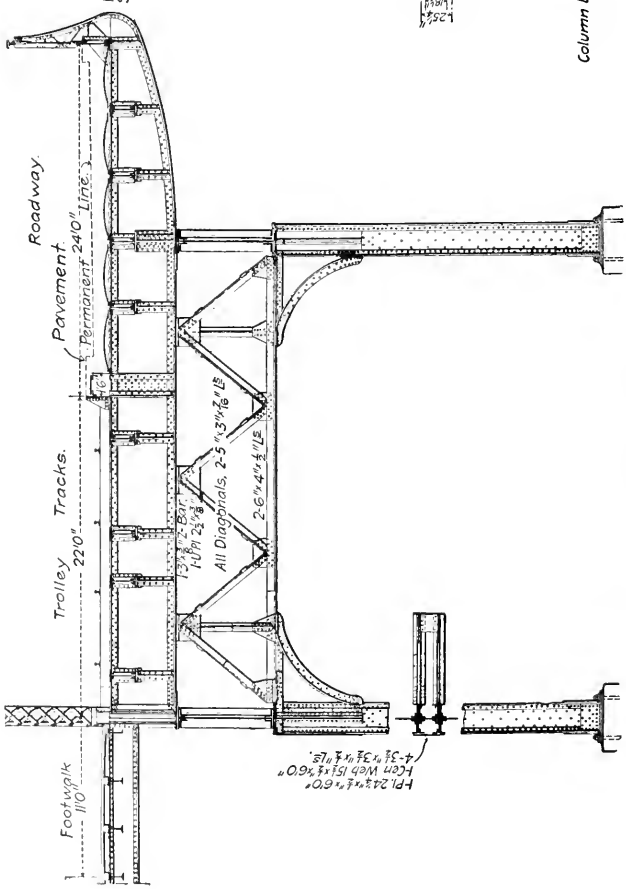

Detail of Transverse Girder.

$3\frac{1}{2} \times 3\frac{1}{2}$-in. angles with double latticing on the sides, and have extended caps on which the transverse and longitudinal girders are seated. The unbraced columns have longitudinal and transverse kneebraces with solid-web plates at the top, and are heavily reinforced for flexure strains.

In all of the towers the longitudinal bracing is as shown, except that in the shorter ones the middle horizontal strut is omitted. All the horizontal struts are made of pairs of rolled or built channels, latticed; the diagonals have I-shaped cross-sections and are made of two pairs of latticed angles. All connections are made with double riveted gusset plates. The lowest horizontal struts have a clearance of about 14 ft. above the ground, so that there is free passage through the bottom of the towers, both longitudinally and transversely. The longitudinal girders are $6\frac{3}{4}$ ft. deep and are seated on top of the columns. The caps of the columns are extended by brackets in three directions, the lateral extensions, on the inside supporting the lower flanges of transverse lattice sway-brace girders having their chords in the same horizontal planes with those of the longitudinal girders. Each pair of longitudinal girders is connected together by cross-frames and horizontal diagonal angles, and floorbeams 20 ft. 10 in. apart are set across their top flanges. Every alternate column has one fixed and one sliding connection to the longitudinal girders; in the latter, the lower flanges of the girders are bolted to the column caps through slotted holes; in the former they are riveted. At expansion points the floorbeams rest on both girders, but are riveted to the fixed ones only. Guide strips are riveted to the caps on each side of the lower flanges of the longitudinal girders.

The elevated railroad structure corresponds to that over the masonry approaches, and its columns are set on top of the inner longitudinal girders. They have extended bases riveted to their top chords and stiffened by vertical gusset plates. The feet of the columns have transverse vertical diaphragms for the connections of the floorbeams, which just rest on the edges of the girders and are riveted to the column webs. The other end of the floorbeam cantilevers $13\frac{1}{2}$ ft. beyond the outer girder and has vertical gusset-plate braces to its top chord. The roadway stringers are $21\frac{1}{2}$-in. plate girders 4 ft. apart. The trolley tracks are 9 ft. 9 in. apart on centers, and each is supported on a pair of $21\frac{1}{2}$-in. stringers, $6\frac{1}{2}$ ft. apart. All the stringers are seated on shelf angles, the horizontal flanges of which have bearings on the

tops of pairs of vertical web-stiffener angles. The floorbeams have a $54 \times \frac{3}{8}$-in. web and four $6 \times 6 \times \frac{11}{16}$-in. chord angles, without cover plates. The tops of the stringers and floorbeams are flush, and the top chord angles of the latter are cut off at the ends to clear those of the former. The fixed ends of all stringers are riveted to the floorbeam webs, and the expansion ends slide on the shelf brackets to which they are bolted through slotted holes. The roadway platform is covered by buckle plates stamped in strips wide enough to reach from center to center of stringers and long enough to reach from center to center of floorbeams. The pavement on the buckle plates is confined between vertical end and side plates, and the expansion joints are covered by the horizontal flange of one transverse angle at the surface level slipping over another just below it.

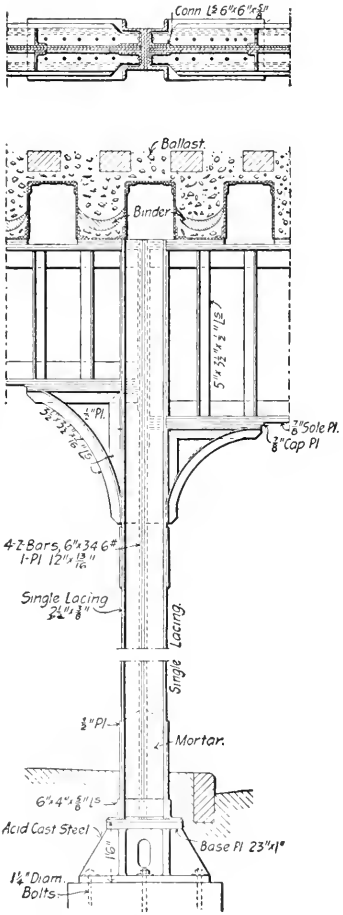

Girder Connections. — Hudson River Bridge.

The Hudson River Bridge Approach, Albany. — The double-track passenger bridge of the New York Central & Hudson River Railroad across the Hudson River at Albany, N.Y., has a total length of about 1800 ft., and besides one draw span and three fixed spans of lattice-girder construction includes seven 70-ft. 3-in. plate-girder spans, one 113-ft. 6-in. plate girder span erected in 1899 and 1900 on the old substructure built in 1872, and a solid-deck plate girder viaduct on columns over Maiden Lane, all of which replaced the old lighter and lower structure without interrupting traffic.

The 70-ft. spans are skewed to form arcs of a curve 546.31 ft. long with a radius of 709.4 ft. The two girders in each span are united by cross-struts and lateral diagonals in the planes of the lower flanges and by the web-connected plate and angle floor troughs midway between the top and bottom flanges. The

tracks are 12 ft. apart on centers, and the girders are 29 ft. apart on centers and are supported about 30 ft. above water level on masonry piers.

The Maiden Lane viaduct has one roadway and two sidewalk spans with three lines of deck plate girders supported on abutments and curb columns and carrying on the top flanges the plate and angle solid floor troughs. Longitudinal bracing is afforded by solid-web kneebraces with curved flange angles. The bottoms of the columns extend below the surface of the street and are filled with concrete. The Z-bar columns have latticed flanges and are web-connected to the girders. The floor troughs are filled with stone ballast on which ties are laid so as to support the track rails in any required positions.

CHAPTER XXVII

TRACK ELEVATIONS

Jersey City, 3000 ft. × 18 ft.

THE four-track structure of the Pennsylvania Railroad Company's approach to the Jersey City terminal depot is about 3000 ft. long, weighs 2800 lbs. per lin. ft., and is designed for the heaviest passenger trains and locomotives at a high speed. It has a total height of about 18 ft., and is carried on single unbraced columns 51½ ft. apart in three longitudinal rows 18¼ ft. apart. Transverse girders are seated on the column caps, cantilever 3 ft. 9 in. beyond the centers of the outside ones, and have solid-web kneebraces to all of them. Each is made in two equal sections butt-jointed and spliced with field-riveted web cover plates over the centers of the middle columns. The longitudinal girders have field-riveted web connections to the transverse girders, except one sliding end at every third bent, which has a drop end with the bearing seated on a horizontal reinforced shelf to which it is connected by bolts through slotted holes. The vertical distribution angles in these bearings are milled top and bottom. The longitudinal girders are divided into six panels by horizontal transverse angles connecting the top and bottom flanges of the two inside lines and by the usual X-brace sway frames between the outside and middle inside girders in the same planes. The panels between these sway-brace frames have zigzag lateral angles. The accompanying transverse view is composed of parts of several successive sections, showing a sway-brace frame, a fixed end and an expansion end connection, which of course do not come in the same plane in the structure. One longitudinal half of the structure was erected and traffic was diverted to it before the other half was erected.

Park Avenue Improvement, 12,000 ft.

The four-track Park Avenue approach of the New York Central & Hudson River Railroad to the Forty-second Street terminal, New York, is about 2½ miles long, and except for the river cross-

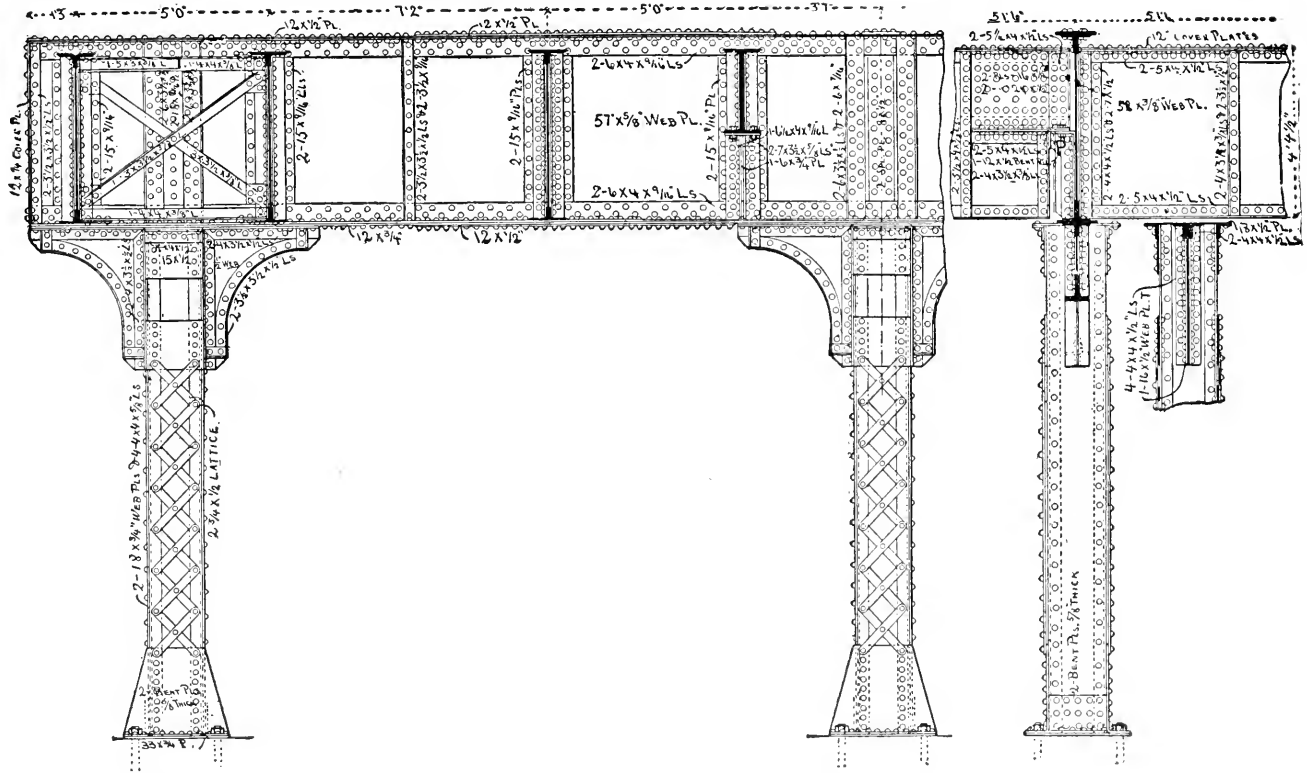
5'0"
7'2"
5'0"
12 x 5/16 PL
2-6 x 4 x 9/16 LS
57" x 5/8" WEB PL.
2-15 x 5/16" PL.
12 x 3/4
12 x 1/2
2-15 x 1/2
2-15 x 11/16
2-15 x 13/16
2-15 x 1/4
2-3 1/2 x 3 1/2 x 1/2 LS
2-3 1/2 x 3 1/2 x 7/16
2-3 1/2 x 3 1/2 x 5/16
2-3 1/2 x 3 1/2 x 1/4 LS
2-6 x 4 x 7/16 LS
2-7 x 3 1/2 x 5/16 LS
1-6 x 3/4 PL
2-6 x 4 x 9/16 LS
12 x 5/16 COVER PLATES
2-5 x 3 1/2 x 1/2 LS
5'4"
5'4"
2-5 x 3 1/2 x 1/2 LS
5/8 x 3/8" WEB PL.
2-4 x 3 1/2 x 7/16 LS
2-4 x 3 1/2 x 5/16 LS
4'4 1/2"
2-5 x 3 1/2 x 1/2 LS
2-5 x 3 1/2 x 1/2 LS
2-4 x 3 1/2 x 1/2 LS
2-4 x 3 1/2 x 7/16 LS
2-4 x 3 1/2 x 5/16 LS
2-4 x 3 1/2 x 1/4

ing and short, low embankments, consists of plate girder spans supported on short steel columns. It contains about 17,500 tons of steel, which cost $1,485,000, and was finished in 1896, when there was a traffic over it of about 500 trains daily. The regular structure has unbraced latticed channel columns about 16 ft. high, averaging 65 ft. apart, in three longitudinal rows 28 ft. apart. Three lines of longitudinal girders are seated on the column caps and braced longitudinally with solid-web knee-braces. They are connected by a solid trough floor and have no other longitudinal transverse or sway-bracing except the X-brace struts between the ends of deck girders.

There are no transverse girders. The regular longitudinal

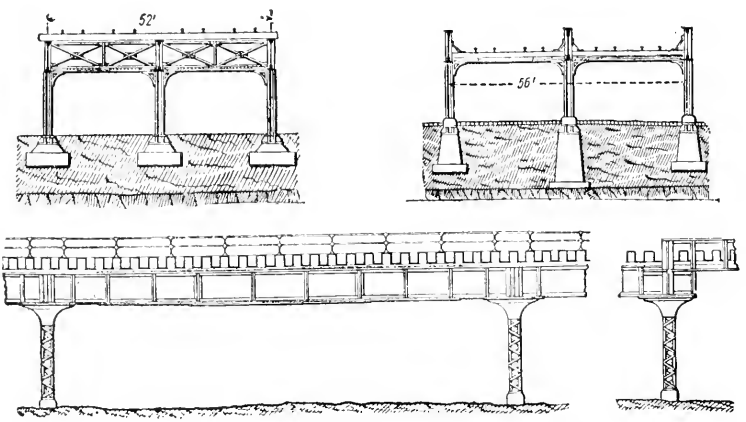

Transverse Elevations of Deck and Through Spans and General Longitudinal Elevations.

girders have 84-in. webs, $\frac{3}{8}$ and $\frac{9}{16}$ in. thick, and 6 × 8 × $\frac{3}{4}$-in. flange angles reinforced by 10-in. and 24-in. plates on the outside and inside girders respectively. The fixed ends of the girders have fourteen $\frac{7}{8}$-in. rivets through the cap plates and their lower flanges, and the expansion ends have fourteen 1-in. bolts in 1 × 1$\frac{1}{2}$-in. slotted holes. Both through and deck girders are used, both having the same section of floor troughs with 15 and 18 × $\frac{3}{8}$-in. top and bottom plates, 17 × $\frac{7}{16}$-in. side plates, and 3 × 3 × $\frac{3}{8}$-in. angles. They are filled with stone ballast, and each is drained through a 1$\frac{1}{4}$-in. pipe in the middle. The troughs were shop-riveted in 8-ft. sections, and have bearing plates on their upper surfaces to receive the rails on insulating pieces.

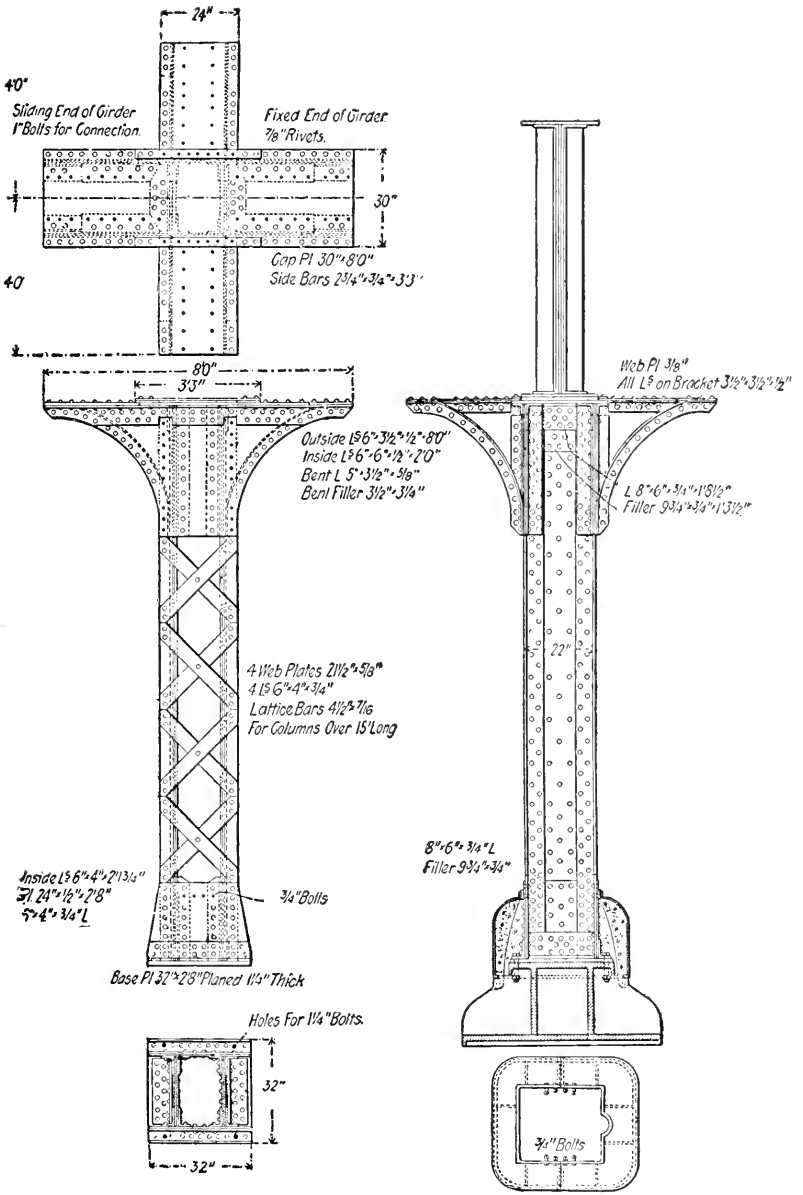

Girder Seats and Bracing on Columns.

Southwest Avenue Boulevard 9-Track Structure, 631 ft. × 14 ft.

An unusually wide viaduct carries four tracks of the Pittsburg, Chicago, Cincinnati & St. Louis Railway, two tracks of the Chicago Terminal Railroad Company, and three tracks of the Chicago Junction Railway Company, across the intersection of the Southwestern Avenue Boulevard and West Thirty-ninth Street at a considerable skew with both streets. The viaduct is about 631 ft. long on the skew, and about 155 ft. wide over all, perpendicular to this dimension. It is really divided into two independent parallel structures, one carrying four tracks for the use of the P. C. C. & St. L. Ry. Co., and the other carrying five tracks for the other two companies, and separated from the first by a space of about 40 ft. in the clear.

The structure includes 107 through plate girders of about 32 to 79-ft. span, which are supported on the end abutments at the outer edges of the boulevard sidewalks and on 95 steel columns about 14 ft. high. In each street the columns are located on the curbs and on center or intermediate lines parallel to them, and as the angle of intersection of the streets is not exactly 90 degrees, nearly all the spans differ in length, some of them only a small amount, and there are very few duplicate girders or uniformly located columns, thus making great complexity of construction. West Thirty-ninth Street has a 40-ft. driveway and two 13-ft. sidewalks, and is crossed in some places by single spans of about 48 ft. reaching from curb to curb, and elsewhere by two spans supported on columns in the center of the driveway. The boulevard and Southwestern Avenue have a total width of 240 ft., made up with four lines of sidewalks, two driveways and three parked strips, and the columns in it, except in the intersecting street, are arranged at the intersections of lines parallel to its center line and to the center line of the viaduct. By this arrangement all obstruction to traffic is avoided except by columns on the curb lines and a few on the center lines of 40-ft. driveways.

The location of columns, abutments and girders, and the general arrangement of the viaduct, are indicated on the general diagram, where the column centers are shown by small circles, and the center lines of the girders are broken with single dots. On the north side of the boulevard six lines of girders are arranged 13 ft. apart on centers in one group, and on the south side an entirely separate group of five lines is arranged 13 ft. apart on

centers. At the inner edges of the boulevard driveways there are expansion joints in the viaduct, with one fixed and one sliding bearing for the girders supported on the columns there, all

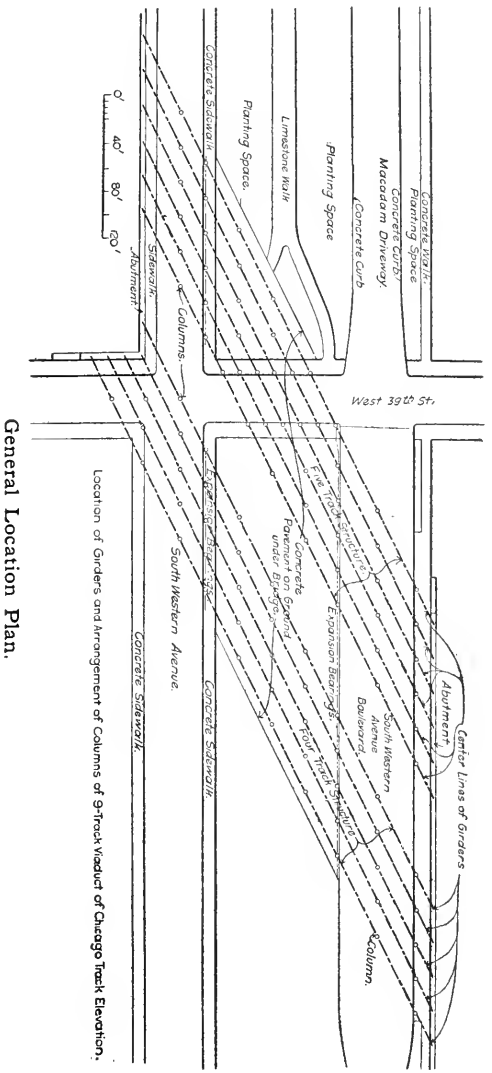

other bearings for the girders being fixed both on the columns and on the abutments.

The girders are of simple, ordinary construction, with full-length plates and angles in the T-shaped flanges so that splices

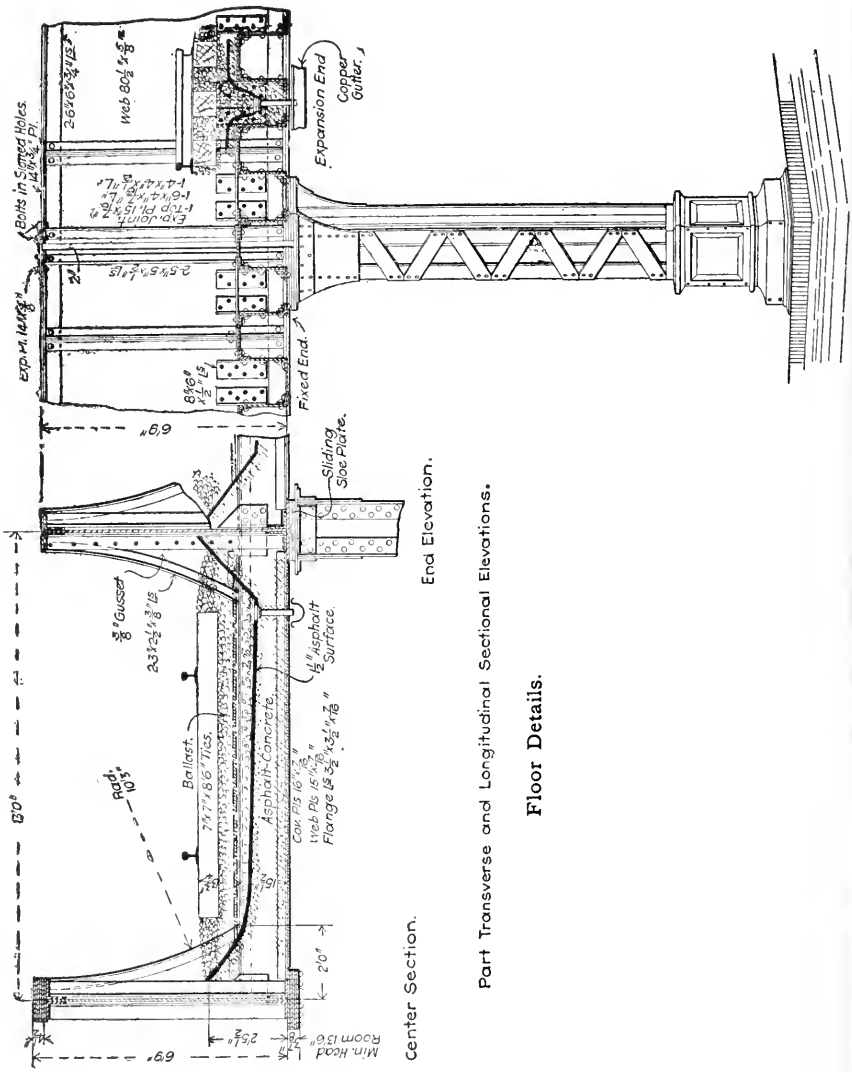

Part Transverse and Longitudinal Sectional Elevations.

Floor Details.

are required only for the web plates, which are made in as long pieces as practicable. At the abutments the upper corners of the girders are rounded to a radius of $26\frac{1}{4}$ in., elsewhere they are square. Not more than three sections of web plates are used in any span, and in the long spans these plates have their edges cut to a slight angle in the two end sections only, so that these plates are oblique angled parallelograms, and when fitted with the square ends of the center section of plate produce a center camber of about $1\frac{3}{16}$ in. The rivet lines are laid off on circular curves, making versed sines of $\frac{3}{32}$ in. with the edges of the plates. The girders are divided into panels, with a length approximately equal to their height, by vertical web-stiffener angles composed of pairs of angles on each side, where they engage transverse sway-brace gusset plates, and single angles where there are no gusset plates, all of them being provided with filler plates and having their ends finished to bearing on the flange angles. The gusset plates are peculiar in having their outer inclined edges curved, and are stiffened with pairs of flange angles on the horizontal and inclined edges.

The superstructure was designed under the specifications for railway bridges of Pennsylvania lines west of Pittsburg, of April, 1897.

A $79\frac{1}{2}$-ft. girder, supporting one-half of one track, has a calculated span of 78 ft. and effective depth of 81 in. The assumed dead load is 2400 lbs. per lin. ft., and the live load is 25,000 lbs. concentrated plus 2500 lbs. per lin. ft. The total calculated moment is 50,567,400 in.-lbs., flange stress 624,300 lbs., and the required net area of tension flange, 54.46 sq. in. The end shear is 93,600 lbs. minimum and 216,100 lbs. maximum; the required web area 32.78 sq. in.; the web used being $80\frac{1}{2} \times \frac{7}{16}$ in., required end rivet pitch 2.15 in., for which a 2-in. staggered pitch was used. The bottom flange is made with two $6 \times 6 \times \frac{3}{4}$-in. full-length angles, one full-length $20 \times \frac{3}{4}$-in. cover plate, one $\frac{5}{8} \times 56\frac{1}{2}$-ft., one $\frac{9}{16} \times 44$-ft., and one $\frac{3}{8} \times 28\frac{1}{2}$-ft. cover plate, all 20 in. wide. The top flange has the same gross sectional area, and is made up with two $6 \times 6 \times \frac{3}{4}$-in. full-length angles, one $\frac{3}{4}$-in. full-length, one $\frac{3}{4}$ in. $59\frac{1}{2}$-ft., one $\frac{5}{8}$ 50-ft., one $\frac{5}{8}$ $40\frac{1}{2}$-ft., and one $\frac{9}{16}$ 28-ft. cover plates, all 14 in. wide. The intermediate girders, from 71 to 76 ft. long, which support one track, have additional $16 \times \frac{1}{2}$-in. vertical plates in their flanges. All spans have flange plates and angles of the same widths. Web plates vary from $\frac{3}{8}$ to $\frac{11}{16}$ in. thick,

and have a uniform depth of 81 in. back to back of angles for all spans.

All girders have 20 × ⅞-in. sole plates at both ends. Where they are seated on the column caps they engage center guide

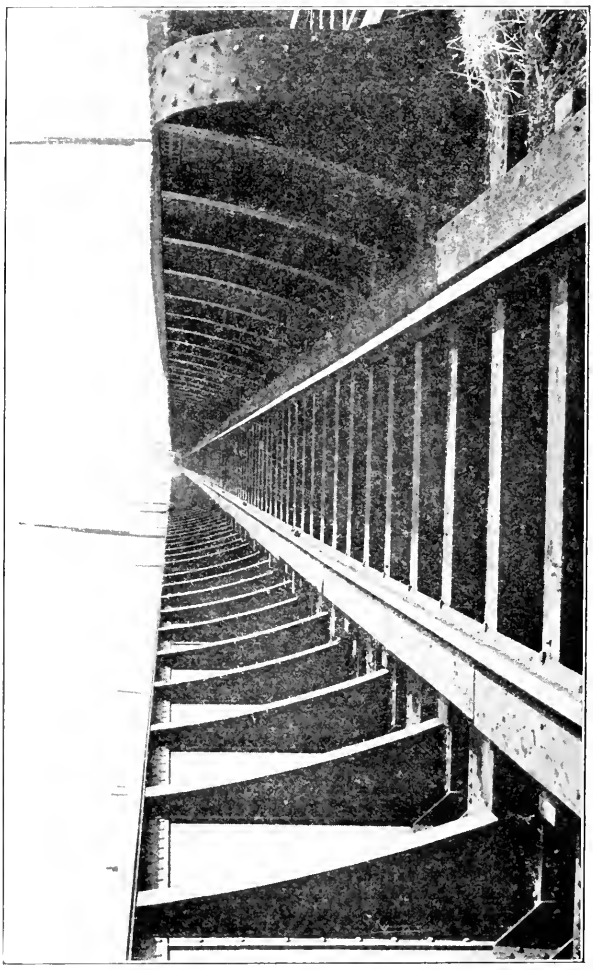

Intermediate Girders and Sway-Bracing.

ribs, and are secured by rivets at the fixed ends and by bolts in slotted holes at the expansion ends. At the abutments, they have pin-connected cast steel pedestals and shoes.

The spans have no floorbeams, stringers, or lateral systems. The girders are connected only by the transverse plate and angle troughs of the solid ballasted floor system. The troughs are

16½ in. wide on centers of webs, and 13½ in. deep, made with ½-in. plates and 3½ × 3½ × ½-in. angles, and are shop-riveted together in sets of three, four, or five, so as to form sections up to about 9 ft. long. These sections are connected together by bottom plates field-riveted to one section, and shop-riveted to the adjacent section. The troughs are made to fit closely against the main girders, the ends of their lower angles being cut to clear the edges of the flange angles, and to take bearing on the upper surfaces of the flange cover plates. The troughs are connected to the girders by short vertical angles shop-riveted to the end of each web plate with five rivets, and field-riveted to the girder web with five rivets. All rivets are ⅞ in. diameter, and the holes for field-driven rivets were punched ¾ in. and reamed in the field after assembling.

The trough floor is designed for a dead load of 3500 lbs. and a live load of 5000 lbs. per lin. ft. of track, plus a concentrated live load of 50,000 lbs. All material in the viaduct is of medium open hearth steel, except the soft open hearth steel shop rivets and the wrought iron field rivets. All rivet holes are sub-punched and reamed. The steelwork weighs about 4420 tons, and its erection was commenced August 22, 1904, and completed March 14, 1905. About 126,000 ⅞-in. field rivets were driven, and their holes were reamed at the site by pneumatic tools.

Detroit Union Depot Track Elevation, 4000 ft. × 25 ft.

The Detroit Union Depot viaduct was described in the Proceedings of the *Am. Soc. C. E.*, May, 1893. It is a three-track plate girder structure about 4000 ft. long with Z-bar columns from about 16 to 25 ft. high, 32½ ft. apart transversely, and 30 ft. apart longitudinally. It was designed for a live load consisting of two 104-ton locomotives followed by a train load of 3000 lbs. per lin. ft. The longitudinal force provided for by column bracing was assumed to be due to two trains moving in the same direction on the outside tracks, and having a coefficient of friction of ⅕ the weight between the rails and wheels. A horizontal force of 750 lbs. per lin. ft. was assumed to act at the base of the rails.

The girders are made of soft steel, and the bracing of wrought iron. The sheared edges of web plates are planed, and rivet holes are punched and reamed. The tension flanges of

the girders were proportioned for maximum stresses of 10,000 lbs. per sq. in. Rivets in shear 9000 lbs., in bearing, 14,000 lbs. No field rivets were used. In place of them there are bolts made of $\frac{15}{16}$-in. cold-rolled steel shafting with a nut and washer at each end. The holes for them were finished by $\frac{15}{16}$-in. reamers, and their strength was assumed to be the same as that of field rivets. The transverse and longitudinal girders have depths of 84 and 45 in., respectively. All transverse girders are connected to the column webs by the flanges of their end vertical web-stiffener angles. Where the longitudinal and transverse column bracing extends to the ground, the outer lines of longitudinal girders are seated on the column caps, and the inner lines on the top flanges of the transverse girders which are reinforced by web-stiffener angles under their bearings only. Elsewhere the longitudinal girders are web-connected to the transverse girders with their top flanges just clearing the under sides of those of the latter. Each pair of longitudinal girders is connected by zigzag lateral angles and by two transverse angles reaching across the full width of the structure in each panel in the plane of the top chords, and there are Z-shape angle-iron sway-brace frames under each track.

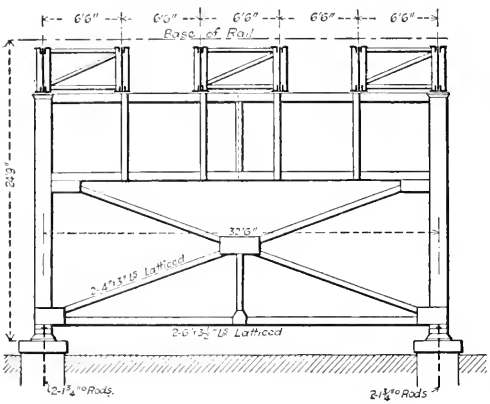

Transverse Section at Tower.

At every third bent, or 90 ft. apart, the longitudinal girders on one side of the transverse girder are connected to it with sliding, and on the other side with fixed, joints. In the sliding joints the ends of the girder are free to expand and contract between the flanges of two vertical web-stiffener angles just clearing them. The lower flange is supported on a casting fitted to the U-shape loop of a bent pocket plate with long vertical legs riveted to the transverse girder web. The ends of the transverse girders rest on short column brackets and are knee-braced to the columns. The kneebraces have jaws which

at the lower ends embrace the column flanges, and at the upper ends engage flanged seats on the girder webs.

The webs of the longitudinal girders are made in two pieces, spliced with a pair of $7 \times \frac{5}{8}$-in. cover plates with two vertical rows of shop-driven rivets. The flange angles have the vertical legs beveled at the ends to make mitered joints with the end vertical web-stiffener angles which serve as connection angles

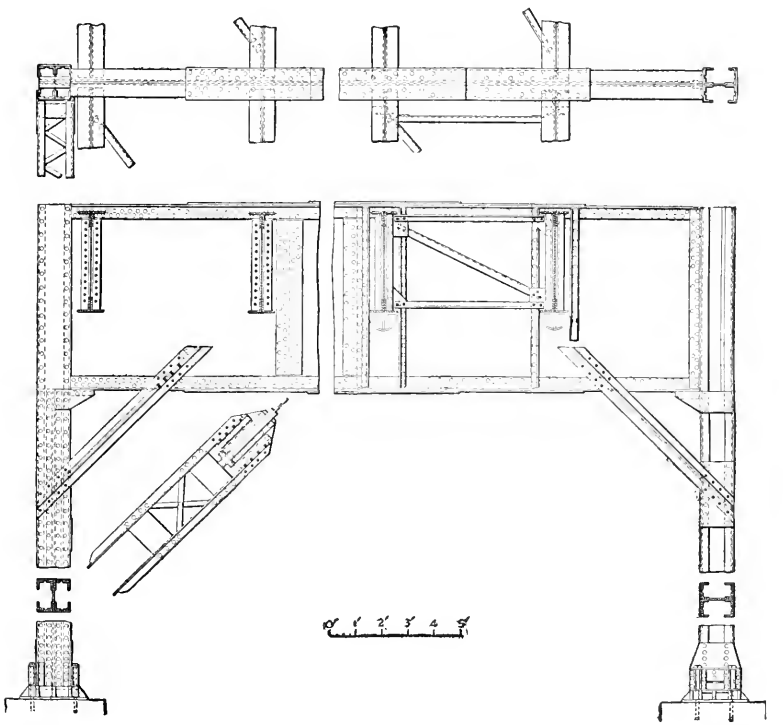

Kneebraced Bent.

to the webs of the transverse girders and are field-bolted to both members. In the transverse girders the 4-in. legs of the flange angles are riveted to the webs with two rows of staggered rivets, and very rigid connections are made for the kneebraces by inclined diaphragms riveted to the web plates and having connection angles so that they afford connections for both flanges of the pairs of kneebrace angles which are spaced far enough apart to clear the girder flange angles.

Chicago Track Elevation.

The track elevation of the Lake Shore & Michigan Southern and of the Chicago, Rock Island & Pacific Railways, in Chicago, are carried on four-track plate girder viaducts. Regular spans have each five 70-ft. plate girders 5 ft. deep with their top and bottom flanges reinforced by 12-in. and 16-in. web plates, as shown in the part elevation. The upper corners of the girders are rounded, and the end vertical angles and top flange angles are mitered together at the centers of the curves. The first top flange cover plates are continuous around the corners and down the ends of the girders to the bottom flanges. The bottom flange cover plates are in three pieces each, spliced by the second top flange cover plates; the other flange angles are not spliced. All flange cover plates are 16 in. wide except the first one on the bottom flange, which is 21 in. wide to receive the floorbeam connections. The webs are stiffened by pairs of vertical 3×3-in. angles about 8 ft. apart, to which are riveted transverse gusset plates connected at their feet with the solid floor platform to afford sway-bracing. The floor is of 10-in. I-beams about 13 in. apart on centers with bent end plates field-riveted to the girder webs. The top flanges of the beams are covered with a continuous $\frac{5}{16}$-in. flat plate, which is riveted by side longitudinal angles to the girder webs. The rails and guard rails take bearing on $\frac{3}{8}$-in. bearing plates over

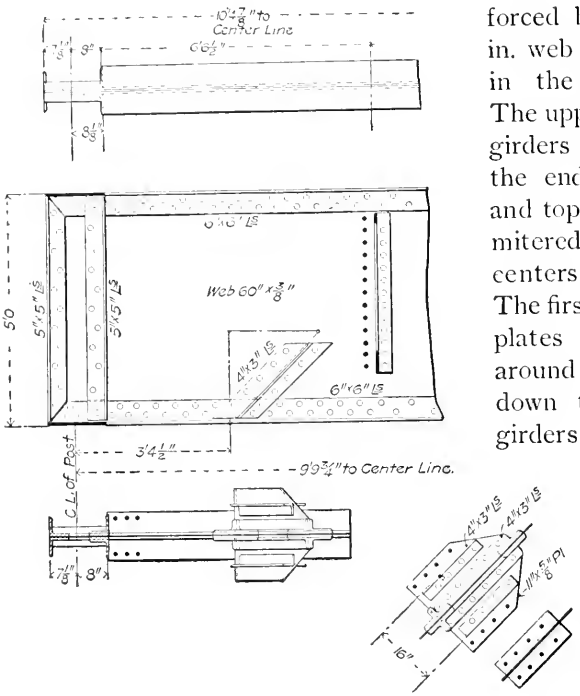

Transverse Girder.

all floorbeams. The girders are cambered $\frac{3}{8}$ in., and the drainage is from the center to transverse gutters at both ends. The girders are seated on 1-in. bed plates anchor-bolted to the masonry.

Atlantic Avenue Improvement, 13,600 ft. × 19 ft.

The Atlantic Avenue viaduct, Brooklyn, has a total length of 13,600 ft., part two-track and part four-track structure, and provides for the entrance of numerous fast trains of the Long Island Railroad from city limits to the terminal depot without grade crossings at the street intersections. The design in many respects resembles that of the later elevated railroads, but is intended for long and heavy trains of the regular steam roads run at high speeds. It consists of web-connected longitudinal and transverse plate girders carried on unbraced columns, and has a total weight of about 12,000 tons. It is 46 ft. wide over all for the four-track portion, and 30 ft. wide for the two-track portion, with an average height of about 19 ft., and a maximum height of 26 ft. from curb to rail base. All spans have longitudinal and transverse plate girders seated on the column caps, and knee-braced to the columns with solid-web brackets having curved flanges. The columns are about 40 ft. apart longitudinally, varying from 30 to 55 ft. in extreme cases. Transversely they are all 26 ft. apart on the two-track section of division No. 2, and 30 ft. apart on the four-track section of division No. 4.

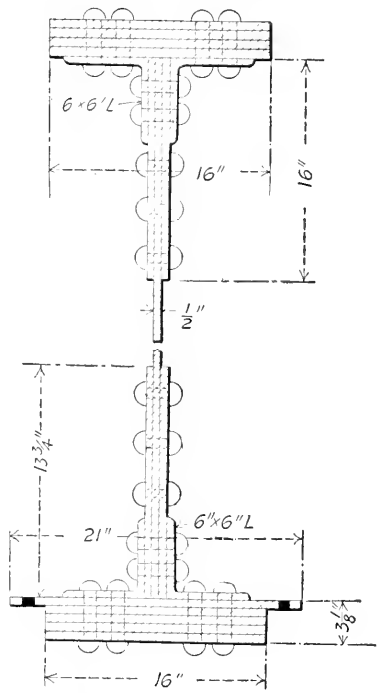

Chicago Track Elevation.

The standard columns are made with two 15-in. channels with their flanges turned in and their webs riveted to the flanges of a 20-in. I-beam. The channel flanges are not latticed, and they have no tie plates except at the bottom, where they receive the angles which connect them to the base plates. The bases are

seated, about 1½ ft. below the surface of the street, on concrete footings to which they are secured by four 1½-in. vertical bolts 4 ft. long with screw ends. The lower nuts take bearing against horizontal anchor plates built into the concrete, and the upper nuts, at about the level of the pavement, are screwed up on horizontal shelf angles with vertical reinforcement angles fitted against the lower flanges. The columns are filled solid with concrete to a height of 2 ft. above the pavement, and concrete is bedded around them up to the surface of the pavement, above which they are farther protected by a cast iron wheel guard 13 in. high, made in two pieces with inside bolted flanges.

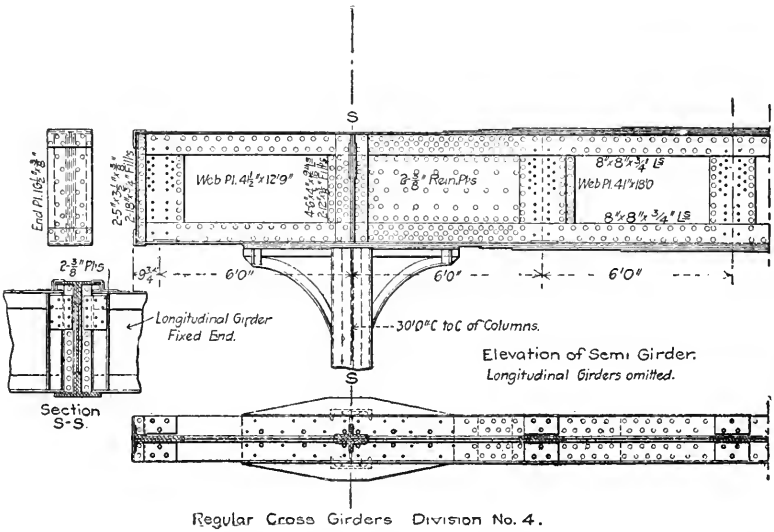

Typical Transverse Section.

The kneebraces are field-riveted to the girders; all the solid-web kneebraces are shop-riveted to the columns; the other kneebraces are field-riveted both to the columns and to the girders. The kneebraces for the longitudinal girders are set about 1 in. higher than those for the transverse girders which are flush with the column tops. Long and narrow cap plates are riveted across the tops of the columns and kneebraces to receive the transverse girders except in the through spans, where they receive the longitudinal girders. At the Nostrand Avenue crossing the head room is a minimum of 14 ft. clear, and the columns are special, made with pairs of channels

latticed. Where the columns have the maximum height of 23 ft., the solid-web kneebraces are replaced by deeper braces 7 ft. high and 7 ft. long, which are made with pairs of angles riveted together, back to back. These columns have small cap plates which afford bearings over 1 ft. wide and 2 ft. long for the transverse girders, and narrow seats for the ends of the longitudinal girders which receive their principal

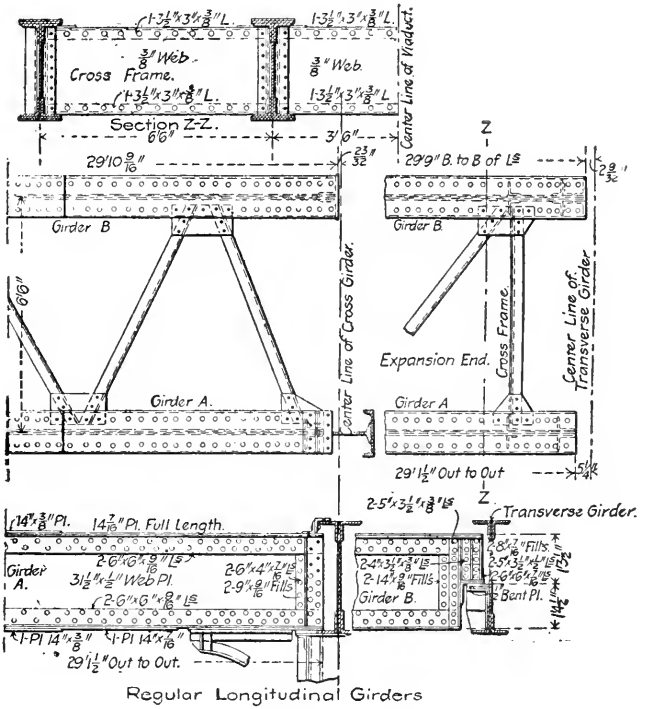

Longitudinal Elevation: Center Girder.

support from their web connections to the transverse girders. The transverse bracket on the inside face of the column is similar to the longitudinal braces shown in the side elevation, and is field-riveted to the web of the I-beam in the center of the column. A tie plate is shop-riveted across the outer flanges of the column, and extends above the cap to receive field rivets in the end of the transverse girder which is thus practically spliced to the column.

In the double-track division the transverse girders are about

27 ft. 3 in. long over all, and reach from out to out of the columns. They have four lines of longitudinal girders web-connected to them, one on the center line of each row of columns, and one line 6½ ft. on each side of the center line of the structure, thus bringing both tracks just inside the columns.

In the four-track division the transverse girders are 44 ft.

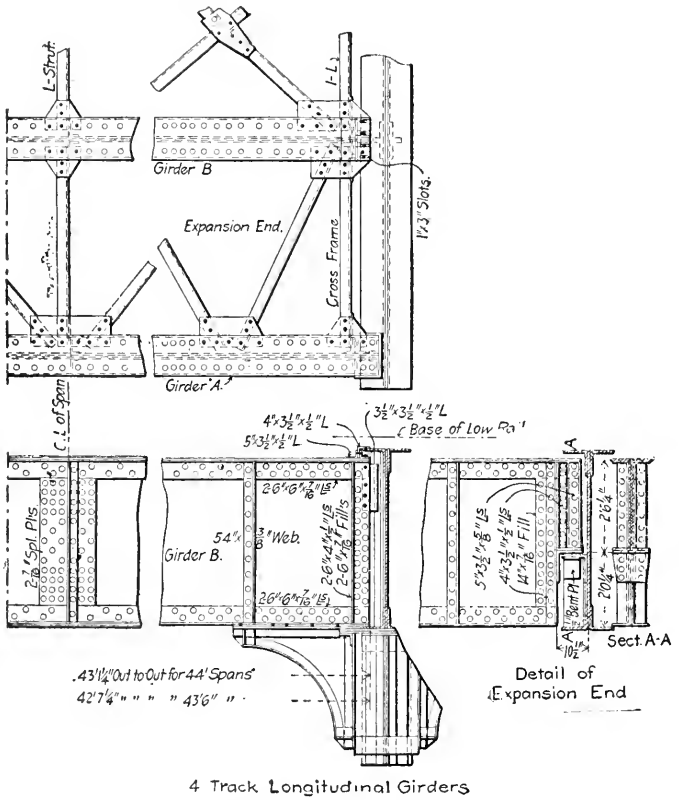

Fixed and Expansion Connections at Column and Transverse Girder.

long over all, and overhang the column centers 7 ft. at each end. They are designed to eventually carry eight lines of longitudinal web-connected stringers, one over the centers of each row of columns, one at each extremity, and one line 3 ft. and one line 9 ft. on each side of the center line. This arrangement makes the centers of the tracks respectively 6 ft. and 18 ft.

from the center of the structure, the outer track being entirely beyond the columns on the cantilever projections of the transverse girders, although its inner longitudinal girder is directly above the column center.

Special pains were taken in the design to make as few variations as possible in the columns and girders, and to confine the variations as much as possible to differences of thickness, length and end rivet spacing, and a great many pieces were made duplicate and interchangeable, thus effecting considerable economy in shop and field, and promoting ease and rapidity of erection. In division 4 the 266 columns are all the same type, and vary only in length and weight of their I-beams and channels. The 133 transverse girders are of two types with $\frac{3}{8}$-in. webs varying from 41 to 59 in. in depth, and have 6×6-in. flange angles and 14-in. cover plates. In each span there are from four to eight longitudinal girders of two types with $\frac{3}{8}$-in. webs from 32 to 60 in. deep and varying in lengths and the end bevels for the curves. In division 2 the 407 columns are of three types, varied for length and the connections to large and small kneebraces. The 186 transverse girders are of six types with $\frac{3}{8}$-in. webs from $37\frac{1}{2}$ to 66 in. deep and 8×8-in. flange angles and 17-in. flange cover plates. The increased depth of flange angles affords space for triple rows of rivets where the web is reinforced to provide for maximum shear near the columns. There are 744 longitudinal deck girders of four types. In both divisions all the longitudinal girders have $\frac{3}{8}$-in. webs from $31\frac{1}{2}$ to 60 in. deep, 6×6-in. flange angles, and 14-in. flange cover plates. The bottom flanges of the transverse girders are field-riveted to the column caps and kneebraces, and their webs are reinforced for shear at the ends and are fillered out flush with the flange angles for connections with the longitudinal girders. The longitudinal girders in the planes of the columns are seated on the caps of the latter, and have their lower flanges connected to the caps and kneebraces by rivets at the fixed ends and by bolts through slotted holes at the expansion ends. These longitudinal girders are also connected to the transverse girders by field-rivets through the upper parts of their webs and through gusset plates shop-riveted to the outstanding flanges of vertical web-stiffener angles on the transverse girders. Pairs of horizontal connection angles are also riveted together to make Z-shape sections field-riveted transversely to the top flanges of the longitudinal girders, and longitudinally to the top flanges of

the transverse girders. The intermediate longitudinal girders have their fixed ends field-riveted to the webs of the transverse girders. Expansion joints are usually made at every third bent, and the longitudinal girders have drop ends with bearing flanges connected by bolts through slotted holes to horizontal bent plate seats reinforced by pairs of vertical distribution angles. There are four sway-brace frames between each pair of longitudinal girders, and the panels between them are braced by single zig-zag top and bottom lateral angles. The sway-bracing consists of horizontal and X-brace angles for the long spans and $30 \times \frac{3}{8}$-in. vertical transverse diaphragm plates with single top and bottom flange angles for the short spans.

The greatest curvature of the viaduct track is thirty minutes, and as the middle ordinate for its 80-ft. chord is less than $1\frac{1}{2}$ in., no change in the spans was made for the curvature except at the expansion ends of longitudinal girders, where the columns are set on the radius of the curve and one span has one oblique end with special girders. As many spans as possible, and nearly all transverse girders except at stations, are duplicates.

Where the head room is minimum, and there is only a few inches clearance between the rail base and the bottom of the transverse girders, there is 200 ft. of solid steel trough solid floor. The troughs take bearing on the lower flanges of the longitudinal girders, and are braced by transverse gusset plates to the girder web stiffeners. Short vertical angles are shop-riveted to the sides of the troughs and field-riveted to the girder webs. The regular troughs are made with 12-in. top and bottom channels and $12 \times \frac{7}{16}$-in. vertical plates. Each trough has a drain hole at each end, and cross-bearers are riveted to each trough for the rails.

Merchant's Bridge.

The Merchant's Bridge Terminal Railway, St. Louis, was described in the *Am. Soc. C. E. Proceedings*, for May, 1894. It is a double-track plate girder viaduct 8177 ft. long, and from $15\frac{1}{2}$ to 30 ft. high. It is built of soft steel with an elastic limit of 37,500 lbs. or more, and is proportioned for the dead load of the structure, for tracks weighing 450 lbs. per lin. ft., and for a live load consisting of two coupled engines and tenders, each weighing 208,000 lbs. The longitudinal bracing is designed

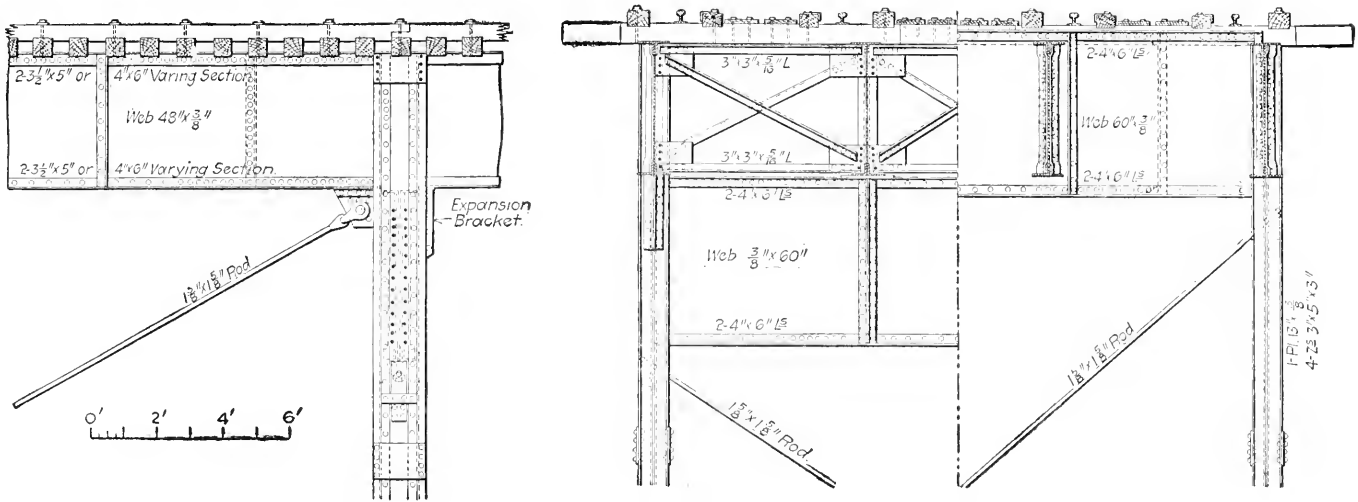

Merchant's Bridge. — Typical Longitudinal and Transverse Elevations.

to resist the force developed by suddenly stopping the two engines followed by a train weighing 3000 lbs. per lin. ft., assuming a coefficient of friction of 20 per cent of the wheel load for the friction between wheels and rails. The lateral system is proportioned for a wind pressure of 750 lbs. per lin. ft. The girders are proportioned for a shearing stress of 7000 lbs. and a flange stress of 15,000 lbs. per sq. in. net section. The total weight of iron and steel in the girders, columns, and braces is 1197 lbs. per lin. ft.

The columns have H-shaped cross-sections made with plates

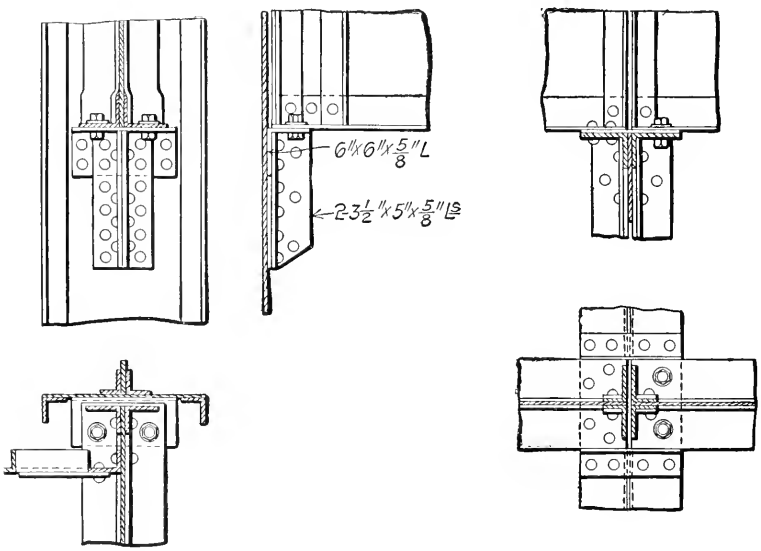

Detail of Expansion Joints

Merchant's Bridge.

and angles or Z-bars, and are spaced 18½ ft. apart on centers in the planes of the outer longitudinal girders, thus leaving just clearance enough between them for two teams, and causing the minimum street obstruction. They extend to the tops of the longitudinal girders, and are designed for convenient riveted connections to the end vertical flanges of both transverse and longitudinal girders. The transverse girders have a 60 × ⅜-in. web and two 6 × 4-in. angles in each flange. At expansion points the top flange angles of the transverse girders just clear above the top flange angles of the longitudinal girders.

Elsewhere the top flanges of the transverse girders are flush with the bottom flanges of the longitudinal girders. The ends of the girders are web-connected to the columns, and their webs are stiffened by pairs of angles back to back on both sides under the seats of the expansion longitudinal girders, and by single angles on one side adjacent to the fixed longitudinal girders and midway between these points and the column connections. All fixed ends of longitudinal girders are field-riveted through their web-stiffener angles to the webs of the columns and of the transverse girders. The sliding ends are seated on column brackets and on the top flanges of the transverse girders, and are secured by bolts through slotted holes in the ends of the lower flanges. They are further secured by guide angles riveted across the tops of the transverse girders. At

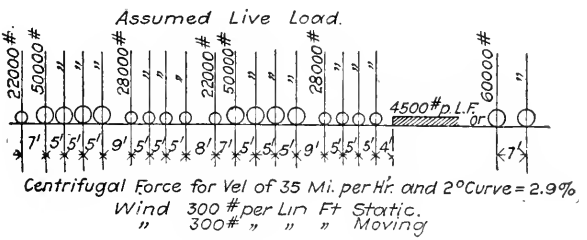

Assumed Live Loads.

each expansion joint both ends of the longitudinal girders slide, and they are connected by transverse struts reaching across all four lines of girders. The pairs of girders under each track are braced by a vertical sway-brace frame and 3 × 3-in. transverse and zigzag lateral angles in the planes of the top flanges.

The longitudinal girders are made with a 48 × $\frac{3}{8}$-in. web plate and 5 × $3\frac{1}{2}$ or 6 × 4-in. flange angles, and were from 28 to $42\frac{1}{2}$ ft. long. Neither longitudinal nor transverse girders have flange reinforcement plates.

The Newark Track Elevation.

The elimination of grade crossings of the Delaware, Lackawanna & Western Railway tracks in Newark, N.J., has involved both the elevation and depression of tracks. Part of the track elevation is on earth embankment between longitudinal retaining walls; but at the principal streets, and near the Passaic River, the tracks are carried on plate girder spans supported on

steel columns, transverse bents and masonry abutments. These structures have an aggregate length of about 871 lin. ft. and a weight of 3,320,000 lbs., and are designed for two and three tracks with heavy trains at high speeds, and wheel loads, wind and centrifugal forces as per diagram.

The viaduct from Ogden Street to the Passaic River is a

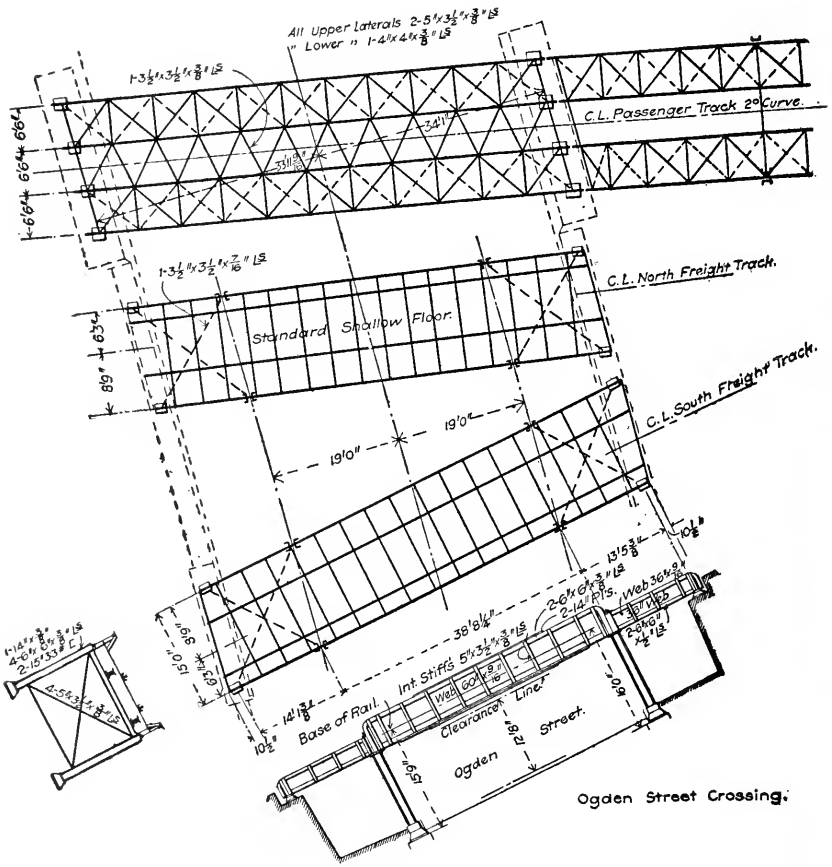

Street Passenger and Freight Spans.

double passenger track structure on a 2-degree curve with seven transverse bents from 25 to 30 ft. apart on the center line, and four lines of plate girders 38 in. deep, web-connected to columns and to transverse girders 45 in. deep. The transverse girders have a clearance of about 17 ft. above the base of rail of a single line of freight track between the columns on the surface of the

ground, and are field-riveted through their end vertical web-stiffener angles to the faces of the vertical columns to which they are also connected by solid-web kneebraces. The columns have I-shape cross-sections, made with a pair of 15-in. channels, a $14 \times \frac{1}{2}$-in. web plate in the plane of the transverse girder, and four 6×6-in. flange angles. They are seated on cast iron pedestals and masonry piers, and are braced together longitudinally with lower horizontal struts and diagonals to make alternate towers and open panels, except the bent nearest the street crossing which is unbraced.

The longitudinal girders all have fixed end bearings, except at one bent near the center of the viaduct, and at the abutment at the Ogden Street crossing where expansion is provided for. At the former place pockets are riveted to the webs of the transverse girder and to the face of the columns, and have horizontal bottom plates on which the lower flanges of the girders slide. They are not bolted at these points, but the flanges just clear the vertical side plates in the pockets and are guided by them. Over the Ogden Street abutment the sliding ends of the girders take bearing on brackets riveted to the end of the street-crossing girders. The pair of longitudinal girders for each track has top and bottom flange zigzag lateral angles in opposite directions.

The viaduct is continued across Ogden Street by a skew span corresponding to the viaduct spans, and having four girders 98 in. deep and $72\frac{1}{4}$ ft. long over all which are in the lines of the viaduct girders. The girders weigh about 40,000 lbs. each, and one girder in each pair has fillers on the top flange to raise the track ties and provide the required rail elevation. The ties are dapped over the girder flanges and fillers, and the rails are laid on the webs of 10-in. longitudinal channels, spiked to the ties, flanges up. Adjacent to the viaduct span there are two single-track through freight bridges at different skews. Each has a center span about $38\frac{1}{2}$ ft. long, supported on four vertical columns on the curb lines, and two side spans about 14 ft. long, supported at one end on the columns, and at the other end on abutment walls outside the sidewalks. Transverse 20-in. 95-lb. I-beams about $3\frac{1}{2}$ ft. apart are connected to the girder webs at right angles to them, and carry the track rails across their top flanges. Two lines of longitudinal stringers eccentric with the bridge axis and concentric with the track rails are web-connected to the transverse beams, flush with their lower flanges. Each

stringer is made with a pair of 10-in. channels riveted together, back to back, with a 10 × ½-in. vertical plate between their webs. The street ends of the short girders are riveted to the ends of the long girders through their vertical angles, and the abutment ends are seated on cast iron fixed pedestals proportioned to reduce the masonry pressure to 340 lbs. per sq. in.

West of Ogden Street there is a two-track viaduct about 292 ft. long with four lines of girders spaced 3 ft. 3 in. and 9 ft. 9 in. from the center line. There are five spans of 35 ft., two of 25 ft., and one each about 35 and 32 ft. At one end the

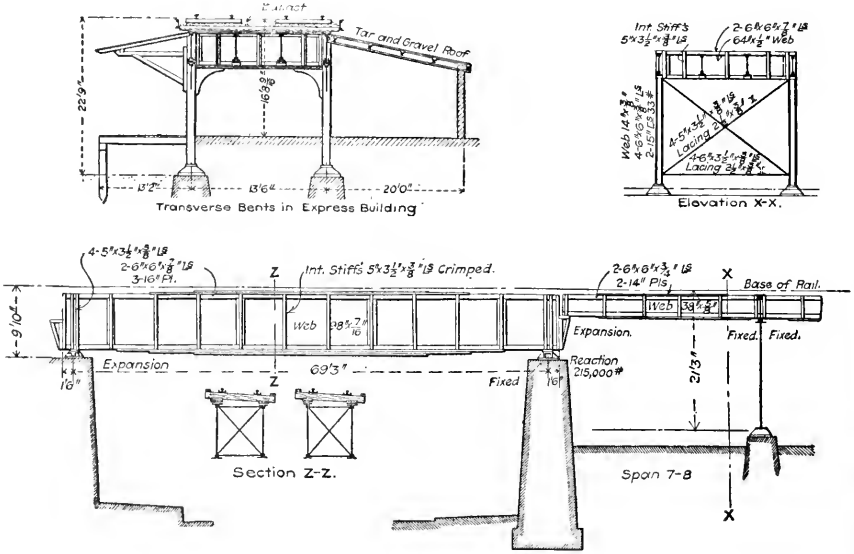

Viaduct from Ogden Street to Passaic River.

girders are carried on the brackets of the Ogden Street girders, and at the other end they have fixed cast iron pedestals on the concrete abutment or end pier of a series of concrete arches, which intervenes between this section of the improvement and the Broad Street crossing. The intermediate supports are on transverse bents made with pairs of short vertical posts with cross-sections having two channels, four 6 × 6-in. angles, and one 14-in. web plate. The tops of the columns are connected by transverse girders 4 ft. 8 in. deep, which in four bents have solid-web kneebraces obviating the necessity for sway-brace diagonals which are used in the other bents. The latter bents

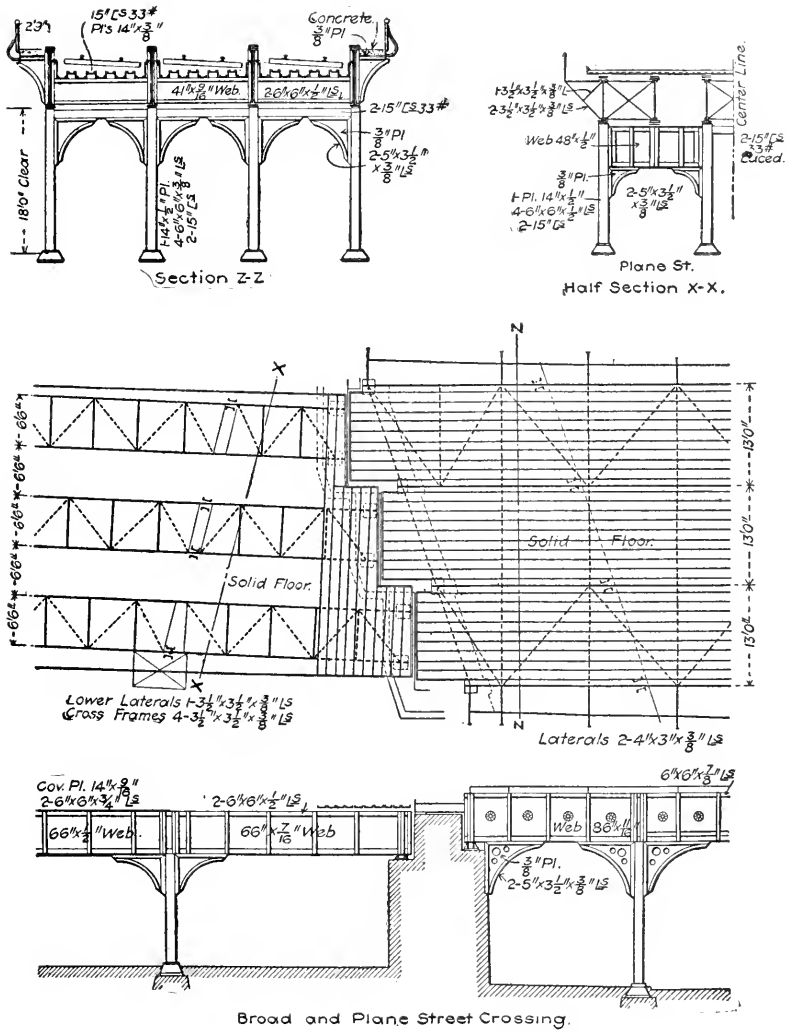

Solid Trough Floor, Three-Track Spans.

are braced together longitudinally in pairs to make towers with horizontal and diagonal struts.

Four of the 35-ft. spans of the viaduct are included between the end walls of the express building, and the viaduct floor there is made solid and waterproof to serve as part of the roof for the building. These column bents are all unbraced, except for the solid-web kneebraces already mentioned, and similar ones which engage the ends of the outside longitudinal girders. One row of columns is seated on the continuous wall for the street-loading platform of the building, and the other row has separate concrete piers. The two inside longitudinal girders are web-connected to the transverse girders, and the outside girders are field-riveted to the faces of the columns. Beveled wooden nailing pieces are bolted to the webs of the outside girders to receive the upper ends of the rafters for the side roofs, and $6 \times \frac{3}{4}$-in. filler plates are set between the two rows of rivets in the top flanges to receive the transverse floor channels countersunk-riveted to them, and riveted together through their flanges. These channels are shop-riveted together in sections of convenient length for shipping, and make a continuous solid deck which required no field-riveting except through the flanges at the ends of the sections. The channels are secured to the girders by wooden filler pieces and bearing clips, which are bolted to the former about 30 in. apart, and engage the under sides of the girder flanges. The ends of the channels are stiffened by fascia girders connected to them by gusset plates riveted between the channel flanges, and the upper sides of the channel webs are covered with asphalt binder, pitched from the center to the ends. Stone ballast is placed over the deck, and the ties are set in it in the usual way.

The Broad Street crossing is separated from the Plane Street crossing only by a skew concrete pier, each side of which there are three three-track spans, from about 19 to 68 ft. long. On the Plane Street side, there are six lines of girders in three pairs, each pair carrying one track, and supported on skew transverse bents with longitudinal and transverse solid-web kneebraces at each post. Each bent has four vertical posts and two transverse girders, as indicated in the half elevation, and the solid floor is made with transverse channels, as already described.

Over Broad Street there is a long center span, and two short end spans over the sidewalks, and the ends of the center span girders are seated on the caps of two four-column skew trans-

verse bents. The four lines of through girders are connected by transverse floorbeams perpendicular to their webs, and have zigzag lateral angles between the lower flanges of the outer pairs. The floorbeams support across their top flanges a solid trough floor of 12-in. channels and 14-in. vertical plates. The troughs are covered with asphalt binder and filled with stone ballast, and at the ends project over the tops of the abutments, and are closed by vertical transverse plates, to retain the ballast. The ends are cut in short square offsets which are included between the oblique sides of the piers.

PART V

HIGHWAY AND SPECIAL SPANS

PLATE girder highway bridges seldom have long spans unless they are of the arch type, and the short spans are, for the most part, light, and have deck girders of the simplest type of construction, with sole plate bearings and wooden floors on the top flanges. In city work the bridges are wider and heavier, and there may be several parallel lines of girders, supported on transverse bents or masonry piers, and having steel beams and solid buckle plate or other steel floors, paved. Even in these cases the dimensions and details are not usually remarkable, and little data has been published about them. For æsthetic considerations, economy of maintenance and durability, there is a present tendency to supersede them by reinforced concrete structures, and for long spans trusses are usually cheaper and more attractive. A few spans are mentioned here, on account of their unusual dimensions or peculiar features.

Plate girders are suitable for carrying canals over streams or roads, because their construction lends itself readily to the formation of the waterway. They must have special design to resist the outward pressure of the water, but may be worked at a high unit strain on account of the practically constant loading and exemption from impact or vibration. Special details are necessary for their connection with the land sections of the canal, and where their length is more than a single span, they must be made practically continuous, or have elaborate expansion joints.

Cantilever plate girders, except drawbridges and bascules which are not considered here, are comparatively rare, and are generally adopted on account of æsthetic considerations, as in order to secure a less depth in the center than at the ends of the span, and so allow an arch-like treatment. They may thus be adopted to secure the greatest clearance underneath under limiting conditions. The connecting spans are usually suspended from the cantilever arms. It is difficult to secure transverse rigidity, and they are not adapted for railroad service.

Various unusual and peculiar constructions and combinations

are grouped together here as miscellaneous structures, and include some which have been designed to meet unusually difficult requirements, some freaks and some old spans built abroad or in the early days of iron bridges, which are interesting as curiosities, and in some cases show the ingenuity of builders before the present shapes were available, and illustrate steps in the development of construction from crude and unscientific details.

CHAPTER XXVIII

LONG HIGHWAY SPANS

Sixth Street Bridge, Philadelphia.

THE highway bridge over the Philadelphia & Reading Railroad tracks at the intersection of Allegheny Avenue and Sixth Street, Philadelphia, Pa., has two parallel abutments about 70 ft. apart, one of which projects about 100 ft. beyond the other at one end. The roadway floor is carried on plate girders $12\frac{1}{2}$ ft. apart and perpendicular to the abutments. At the skew end, there are eight girders beyond the end of the short abutments, and one end of each of these girders is carried on the long abutment, and the other end on an oblique plate girder 123 ft. long and $9\frac{1}{2}$ ft. deep, which is supported on the ends of the abutments.

This girder is of ordinary simple design except that as it supports a triangular floor area, the load is unsymmetrical, and its cross-section corresponds. The chords are made of pairs of $6 \times 6 \times \frac{5}{8}$-in. angles, and a maximum of nine 20-in. plates of $\frac{9}{16}$ in. and $\frac{5}{8}$ in. thickness. The web is from $\frac{3}{8}$ to $\frac{1}{2}$ in. thick, made in $7\frac{1}{2}$-ft. lengths spliced together with four vertical rows of rivets through pairs of $12 \times \frac{5}{8}$ in. plates. There is a pair of 6×6-in. vertical web-stiffener angles at each splice, and at end bearings there are five pairs of them within $5\frac{1}{2}$ ft. of the end of the girder. At alternate panel points there are oblique web connection angles attaching the roadway girders to the lower part of the main girder web, and gusset plate braces extending to the top chord. A single $4 \times 3\frac{1}{2}$-in. continuous horizontal angle is riveted to the middle of the web on the inner side to receive the rectangular floor troughs, which are filled with bituminous concrete with a layer of cement concrete above, in which the granite paving blocks are set. The girder weighed 50 tons and was shipped complete on two ordnance cars with an idle spacer car in the middle and another at each end.

Fort Point Bridge.

A highway bridge which carries Atlantic Avenue, Boston, over a congested portion of the railroad yards near the South Terminal station, Boston, has several plate girder skew spans of elaborate construction caused by the complicated conditions and restrictions of the site. In one span there are three girders carrying two 24-ft. carriageways and one cantilever sidewalk. The girders are substantially alike except for the differences required by the sidewalk connections on one outside girder which is shown in the accompanying elevation. They are 90 in. deep back to back of flange angles, and nearly 76 ft. long with reinforced T-shape flanges and ordinary construction for the principal details. A horizontal shelf angle is riveted to one side of the web about 2 ft. below the top flange to receive the sidewalk floor, and pairs of horizontal connection angles are riveted to the opposite side of the web about 2 ft. above the bottom flange to receive the bottom lateral-rod pins in the planes of the lower flanges of the stringers.

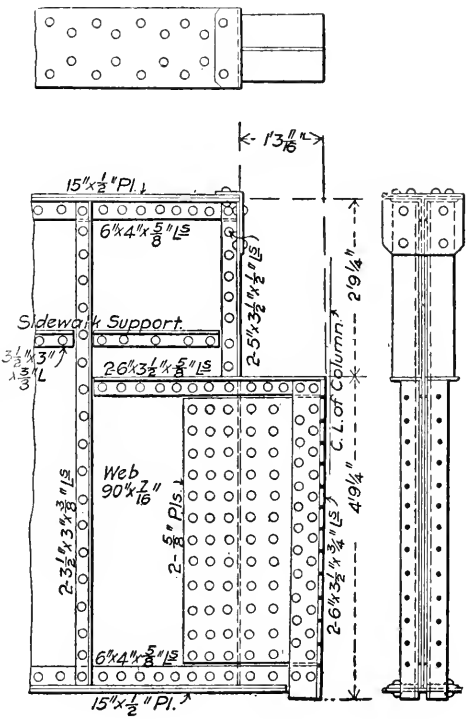

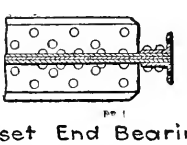

Offset End Bearing.

Fixed End Connection to Vertical Post.

The girders have single-piece flange angles and shop-riveted web splices, made as shown in the detail with four vertical rows of rivets through pairs of cover plates. The girders are supported by trestle bents with three vertical posts each. The

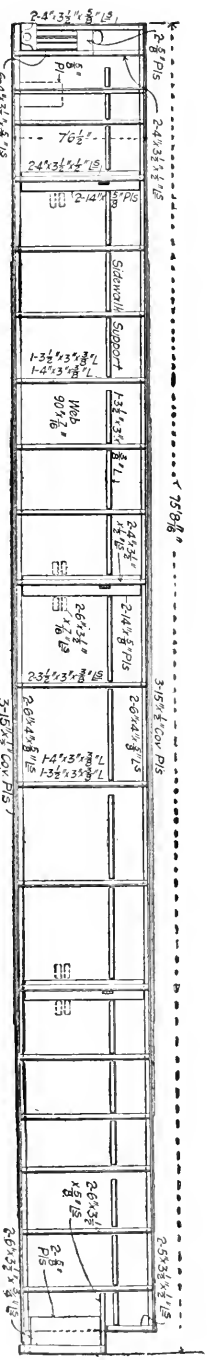

Sidewalk Girder with Suspended Expansion Bearing.

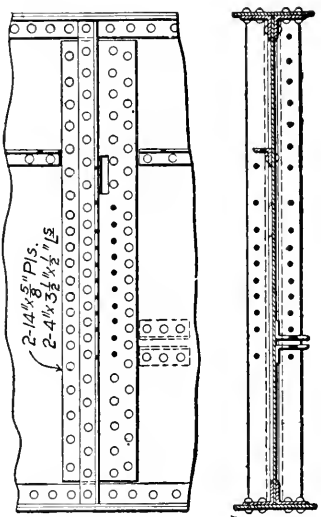

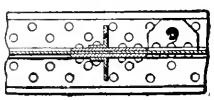

Shop Web Splice.

Splice of Sidewalk Girder.

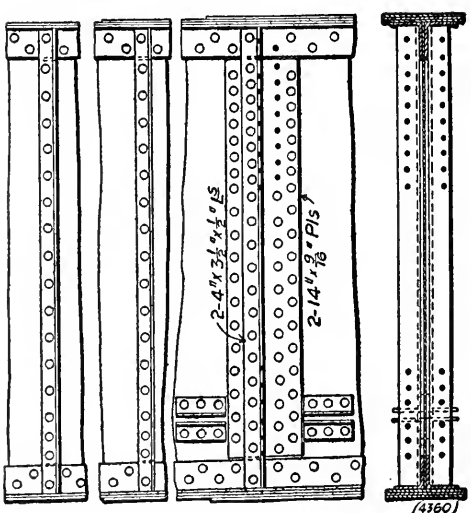

Splice.

Splice of Center Girder.

expansion end of each girder projects between the webs of a vertical post and is supported by a horizontal pin through its web which engages short vertical eyebars with their upper ends pin-connected to the post webs, as shown in the detail, p. 210. The pin bearing is in a pair of castings with horizontal bases engaging the milled ends of vertical distributing angles riveted to the reinforced girder web.

In order to clear an adjacent truss at the fixed end of the girder, the lower part of its web is made longer than the upper part by an extension of the web plate spliced on with two $\frac{5}{8}$-in. cover plates. The end vertical web-stiffener angles project a little below the lower flange angles which have their horizontal flanges cut to clear them, and have field-driven rivets through their outstanding flanges and the cover plates of the trestle post. The rectangular slots in the web of the sidewalk girder are to receive horizontal $6 \times 1\frac{1}{4}$-in. bars which are field-riveted between the vertical flanges of short connection angles on the top flanges of the transverse roadway girders and the sidewalk cantilever brackets and serve as tension splices for the latter.

The Wabash River Bridge, Terre Haute, 121½-ft. Spans.

The new highway bridge across the Wabash River at Terre Haute, Ind., is $812\frac{1}{2}$ ft. long between abutments, about 74 ft. wide over all, and carries a roadway and two sidewalks 50 ft. and 8 ft. wide in the clear respectively. It has six duplicate 120-ft. fixed steel deck spans and one 75-ft. lift span.

The 120-ft. spans each have two 51,400-lb. riveted trusses about 121 ft. long, 45 ft. deep at the ends, and 30 ft. deep at the center over all, and 53 ft. apart on centers which are nearly in the curb lines. The bottom chords of these trusses are curved to give them an arch-like effect, and the horizontal top chords are $4\frac{1}{2}$ ft. above the curb, forming barriers between the roadway and sidewalks.

The bridge is proportioned for a concentrated live load of 20 tons on two axles 12 ft. c.c., on any part of the roadway, or for a uniformly distributed load of 100 lbs. per sq. ft. all over, or for two electric car tracks in the center, or for one electric car track each side of the center line with 27-ft. cars with two axles 7 ft. apart loaded 20,000 lbs. on each, or for one 40-ft. car with four axle spaces 10 and 15 ft. from the center and loaded 15,000 lbs. each, followed by a trailer car with the same dimen-

sions, each axle loaded 10,000 lbs. The sidewalks are proportioned for a live load of 100 lbs. per sq. ft.

Buckle plates $\frac{5}{16}$ in. thick are riveted convex side down to the top flanges of the roadway and sidewalk stringers, and are drained by small holes in the center of each panel. They are covered with at least 3 in. of concrete in the driveway for the brick pavement.

Between the trusses the roadway is carried on three lines of deck plate girders 121½ ft. long and 10 ft. deep over all, which weigh 60,500 lbs. each, and are believed by the designers to be

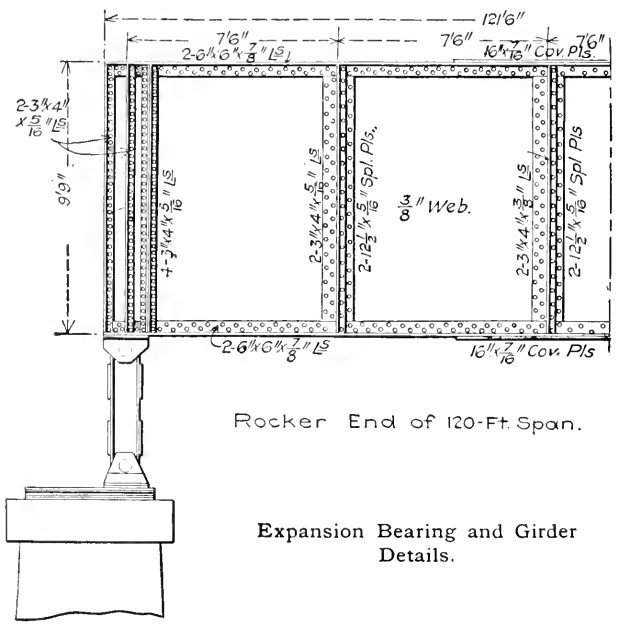

Expansion Bearing and Girder Details.

the longest highway plate girder spans yet built. They are of the simplest possible construction, with web plates $\frac{3}{8}$ in. thick throughout, made in 7½-ft. sections spliced with four vertical rows of rivets in a pair of $12\frac{1}{2} \times \frac{5}{16}$-in. cover plates at each joint. The web is stiffened by a pair of $3 \times 4 \times \frac{3}{8}$-in. crimped vertical angles at each splice, and by four extra pairs at each end. Each flange is made with a pair of full-length $6 \times 6 \times \frac{7}{8}$-in. angles and four unspliced $16 \times \frac{7}{16}$-in. cover plates, 97 ft., 83 ft., 68 ft., and 47 ft. long. The girders are unusual in that although both ends are seated on short vertical columns to raise them to a level corresponding with the adjacent trusses, the

expansion end only had pin bearing, the fixed end being rigidly riveted. The fixed ends of the girders are knee-braced to the tops of vertical posts 38 in. high (see p. 214) with extended bases seated on rail beds and anchorbolted through the latter to the pier masonry. At the expansion ends double-web shoes are riveted to the lower flanges and engage 5-in. pins through the tops of vertical rocker posts about 2 ft. long on centers. The feet of these posts are pin-connected to fixed shoes which are seated on rail beds and bolted to the masonry. The girders are braced transversely by transverse **Y**-frames between the outer lines, and have gusset plates field-riveted to their vertical web stiffeners to receive the sway-brace angles and serve as knee-braces and shelf supports for the floor-beams, $7\frac{1}{2}$ ft. apart. In the side panels the latter are web-connected to the stringers, and in the center panels the stringers are seated on the top flanges of the floorbeams, all of them being arranged to provide a suitable crown for the roadway surface.

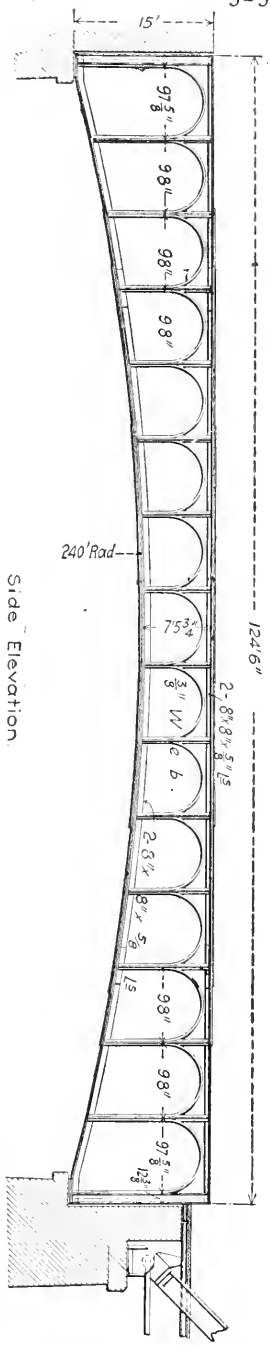

Main Girder. — Croton Bridge.

Croton Bridge.

A highway bridge built by the Aqueduct Commissioners of New York City at the Old Croton Bridge has a clear span of 119 ft. and is made with two through plate girders $23\frac{1}{2}$ ft. apart on centers. They are about $18\frac{1}{2}$ ft. deep at the ends and 9 ft. deep in the center, with horizontal top flanges and curved bottom flanges. The vertical stiffeners on each side of the web are made of pairs of $5 \times 3\frac{1}{2}$-in. angles back to back with a 7-in. reinforcement plate between,

and on each side is riveted a 3 × 3-in. angle curved at the top in a semicircle to be tangent to both web stiffeners of the same panel. This arrangement gives the effect of an arch span with slender spandrel arches carrying the roadway platform. The flanges are made with pairs of 8 × 8-in. angles and 18-in. cover plates in three lengths, spliced with cover plates and cover angles. At each panel point the girders are connected by a 24-in. floorbeam web-connected to the vertical web-stiffener angles and carrying nine lines of stringers and four lines of

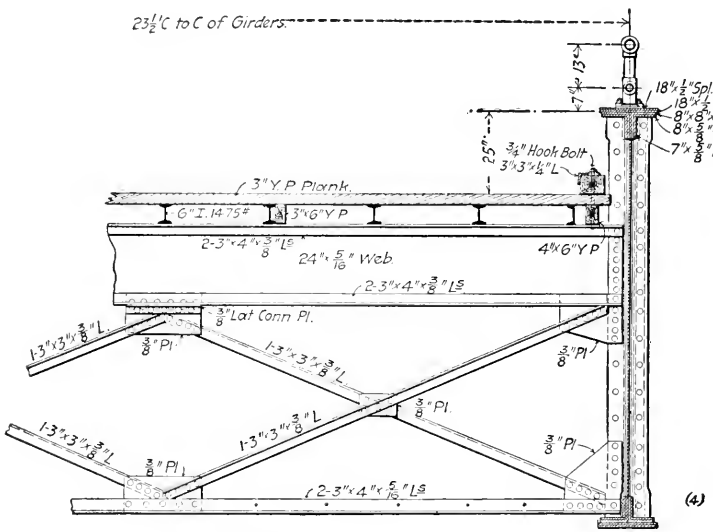

Half Transverse Section.

Roadway and Sway Bracing.

wooden nailing pieces. At the ends of the bridge the girders are sway-braced by transverse bottom struts and diagonal angles in the planes of the floorbeams.

Riverside Drive Viaduct, about 1750 ft. × 80 ft.

The Riverside Drive viaduct, New York, is 80 ft. wide and 80 ft. in maximum height, and besides stone arch approaches has 26 steel arch spans, nearly all of 65 ft. except one of 130 ft. center to center of steel columns. It has a 60-ft. roadway proportioned for a live load of 100 lbs. per sq. ft. of surface, or for a concentrated load of 20 tons on two 5-ft. axles, 12 ft. apart. The side-

walk is proportioned for a live load of 100 lbs. per sq. ft., and the dead loads per lin. ft. are assumed at 9500 lbs. for the 130-ft. span and 8000 lbs. for all other spans. Each span is a compound structure with two hingeless box plate girder arch ribs rigidly riveted tangent to the main columns and connected by spandrel

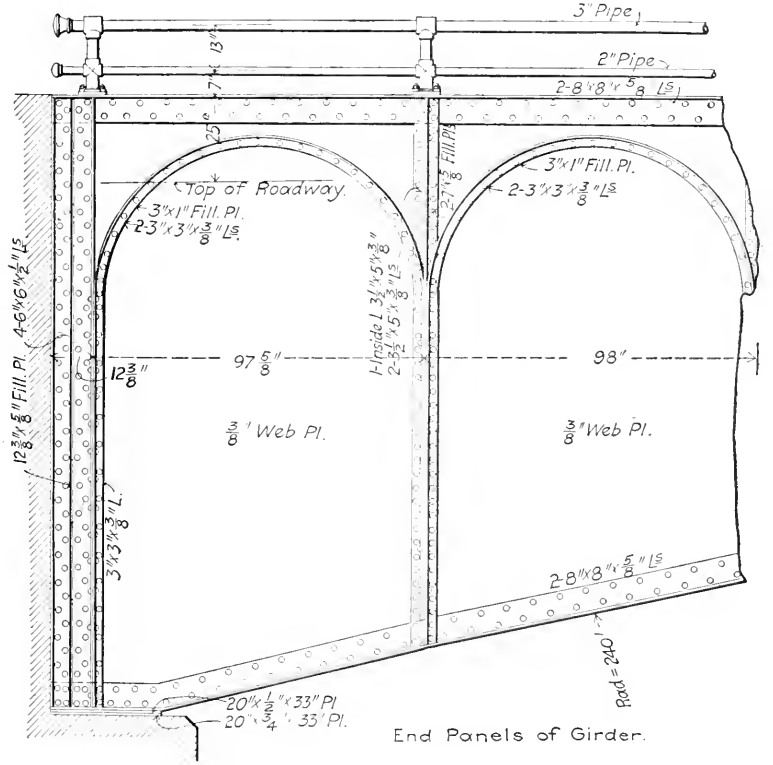

Detail of End Bearing and False Spandrels. — Croton Bridge.

posts to horizontal roadway girders tangent to the crowns of the arch ribs.

It was assumed that the longitudinal girders carry all the dead load of the floor system and are in contact with the arch rib girders at the points of tangency before the application of any live loads, which are partly carried by the arch ribs and partly by the longitudinal girders, shims being provided to compensate for any variations from the computed deflections of the center points of the girders.

The pairs of main columns are connected by transverse arch struts. These provide sway-bracing corresponding to the longitudinal bracing afforded by the main arch ribs, and give stability to the main columns without requiring lower diagonal members or horizontal struts to obstruct the panels between bents near the surface of the ground, thus giving an artistic and graceful appearance to the structure and providing the maximum clearance for the city streets.

The tops of the columns supporting the 130-ft. span girders are connected by transverse lattice girders which carry four lines of intermediate plate girders supporting transverse I-beams, and the center and outside panels between the roadway girders are braced by zigzag lateral angles in the planes of their top flanges. In all other spans there are no intermediate longitudinal girders, and the outside girders carry transverse plate girder floorbeams about 12 ft. apart which support eleven lines of longitudinal I-beam stringers on their top flanges, but have no lateral bracing. In all spans the two 10-ft. sidewalks are carried on plate girder cantilevers with curved kneebrace angles. The bridge has throughout a solid steel deck, made with buckle plates in the roadway and with Carnegie curved trough plates for the sidewalks, and all leveled with concrete and asphalt wearing surface.

In the 130-ft. span the outside roadway girders are box girders with 120 × $\frac{3}{8}$-in. webs, 24 in. apart, stiffened by pairs of 4 × $3\frac{1}{2}$ in. vertical angles about 6 ft. apart. Each flange is composed of two 6 × 6 × $\frac{3}{4}$-in. angles and one full-length and one 100-ft. 36 × $\frac{1}{2}$ in. cover plate. The webs are connected by vertical transverse diaphragm plates at panel points of the sway-bracing. The intermediate longitudinal plate girders in the same span have 120 × $\frac{1}{2}$-in. web plates stiffened by pairs of 5 × $3\frac{1}{2}$ × $\frac{3}{8}$-in. vertical angles $4\frac{1}{2}$ ft. apart, and each flange is made with two 6 × 6 × $\frac{7}{8}$-in. angles, one full-length and one 100-ft. 18 × $\frac{5}{8}$-in. cover plate. Each of them weighs 76,000 lbs. and each of the box girders weighs 124,000 lbs. All of them were shop-riveted complete and erected by booms on the traveler derrick hoisting one end and by tackles suspended from a falsework tower at the opposite end.

The two lines of longitudinal roadway girders in the 65-ft. spans are box plate girders with 60 × $\frac{3}{8}$ in. webs 23 in. apart stiffened by single $3\frac{1}{2}$ × $3\frac{1}{2}$ × $\frac{3}{8}$-in. outside vertical angles and connected by vertical transverse diaphragm plates at floorbeam points. Each flange is made with two 6 × 4 × $\frac{5}{8}$-in. angles and

two 32 × $\frac{11}{16}$-in. cover plates. The webs at the ends of adjacent girders are spliced together over the centers of the vertical posts, on the caps of which their lower flanges are seated, by pairs of cover plates riveted at one end and bolted through slotted holes at the other end. At each transverse bent of main columns there are two floorbeams 5 ft. apart, one of them riveted to the fixed ends and the other riveted to the sliding ends of the girders. The steelwork weighs about 7000 tons. The 129-ft. 3-in. girders are among the longest and heaviest ever shipped complete from the bridge shops and were each loaded on four platform cars from 32 ft. 2½ in. long to 38 ft. 1½ in. long, c.c. couplings. They were seated near the middles of the end cars on double transverse wooden horizontal sills with inclined braces from their outer ends to the top flanges of the girders. The sills at one end had a slotted connection to the car floor, and were seated on longitudinal track plates allowing 11 in. displacement; at the other ends they were pivoted to the car floor with a vertical 3-in. steel pin. It was calculated that on the maximum track curve the girder would form the chord of an arc with a versed sine of 48 in.

Mill Creek Bridge, Cincinnati.

A large city traffic on Sixth Street, Cincinnati, is carried over Mill Creek by a plate girder through bridge about 80 ft. high, which is remarkable for its details of construction and for the dimensions of the two main girders, which are 213 ft. long over all. This gives a clear span of 199 ft. between abutments, a distance which is probably greater than in any other plate girder span in this country, if not in the world. The girders are 16 ft. deep, about 28 ft. apart, and carry a roadway, two 8-ft. cantilever sidewalks and a 6-in. and a 16-in. pipe line. The girders are built of very thin plates and thin small angles; the bottom flanges are made by very wide and thin plates connected to the web with a single row of ¾-in. rivets; the top flanges are efficient compression members, and the deep thin web is stiffened by wide transverse diaphragms, which, with their double flange angles, provide thorough connections between the top and bottom flanges.

The web plates of each girder are in two courses of equal height, those in one course breaking joints with those in the other, and all spliced with butt joints and a cover plate on each

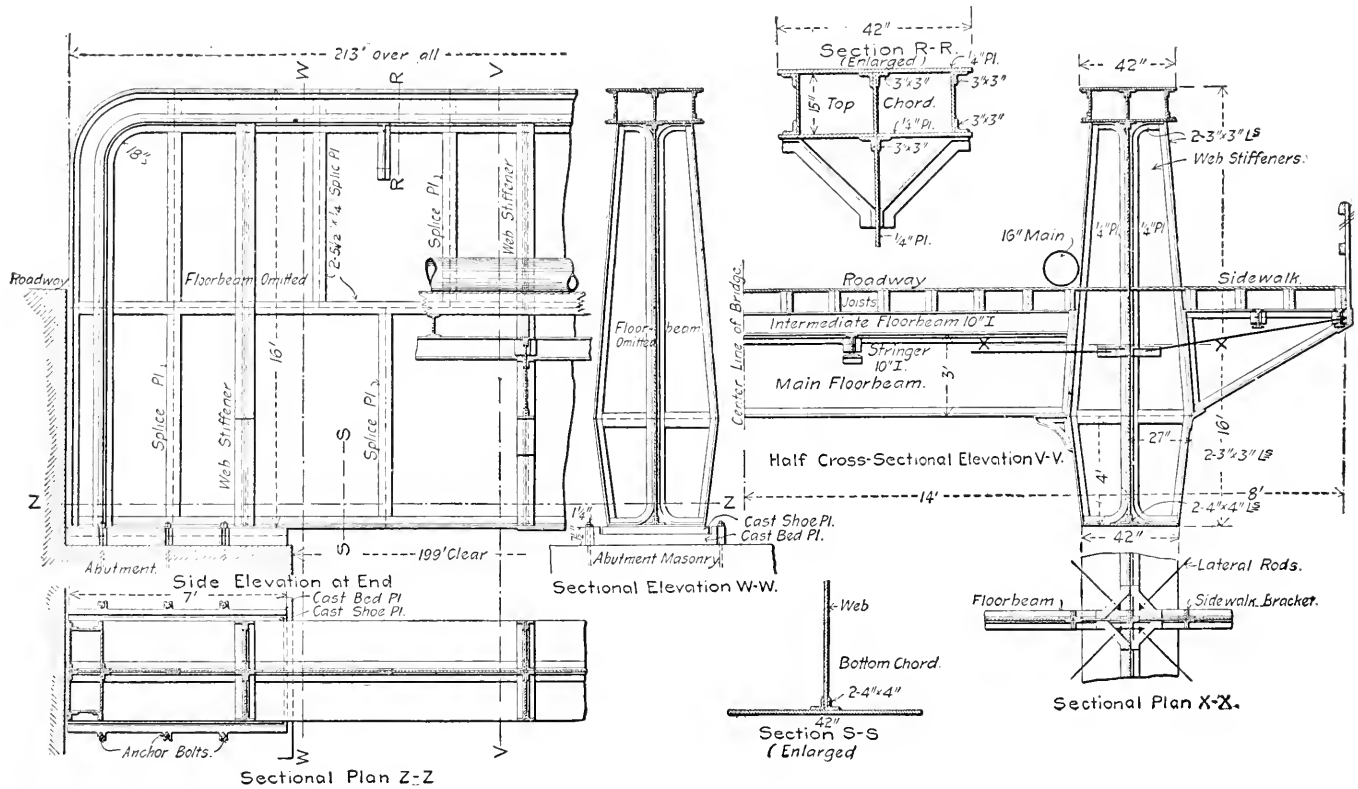

Principal Details of Girders and Bracing.

side, with a single row of rivets in each edge of each web plate. The web is divided by its vertical stiffeners into two 6-ft. end panels and 20 intermediate panels a little more than 10 ft. long, each of the latter being composed of five plates, as indicated in the elevation. The web stiffeners are $\frac{1}{4}$-in. plates with a pair of 3×3-in. flange angles around all sides. The inside flange angles are continuous across both the top and bottom of the diaphragm, are bent to a short curve at the corners to clear the main girder flange angles, and are riveted to both web and flanges of the girder.

The bottom chord of the main girder consists of a pair of 4×4-in. flange angles and one or more cover plates 42 in. wide. As it was inaccessible except at the abutments, the lengths and thicknesses of the plates were not determined, but commencing with a single plate at the end of the girder there was apparently one plate added at each panel point toward the center for at least four or five panels. The top flange or chord of the girder is a closed rectangular section with three webs, and is not unlike the top chord of a modern truss bridge, except that the thickness of the angles and plates is small. The angles are spliced by flat bars on their vertical flanges only, and the cover plates are spliced by short top plates with two transverse rows of rivets in each end. In the middle of the top chord the total thickness of the cover plates is $1\frac{1}{2}$ in. and the thickest plates are $\frac{5}{8}$ in. At panel points the top chord is riveted to the vertical web stiffeners, and midway between them it is braced from the outside of its bottom flange to the web by 5×3-in. T-bar kneebraces with bent ends. The upper corners of the girders are rounded, and the top chords bend 90 degrees there, so that their continuous extensions make vertical end posts reaching to the lower edge of the girder.

Each end of the girder has a flanged cast iron shoe plate about 4 in. thick and 7 ft. long, which slides on a corresponding flanged bed plate anchorbolted to the masonry, on which it has a bearing about 7 ft. long. The edges and surfaces of the plates and angles throughout the bridge were so badly rusted that it was difficult to measure their thickness accurately, but most of them appeared to have been from $\frac{1}{4}$ to $\frac{3}{8}$ in. thick originally. Plate girder floorbeams 3 ft. deep are riveted to the flanges of the web stiffeners at panel points, and carry two lines of 10-in. I-beam stringers which are web-connected to them. A 10-in. I-beam is set across the tops of these stringers between each

pair of floorbeams, and on them are wooden joists, 2 ft. apart on centers, which carry the 2 in. transverse floor plank. The sidewalk cantilever floorbeams have two lines of web-connected I-beam stringers which may originally have carried the floor, but now serve only as braces, the floor being carried on wooden joists on the top flanges of the cantilevers.

The lateral diagonals are single round rods reaching across three panels of floorbeams and having screw ends with nuts bearing on the vertical flanges of short horizontal angles with bent ends, riveted across the corners to the webs of the main girders and their stiffeners. The intersecting diagonals terminate at the center of the panel and are connected there by a small horizontal welded ring of angle iron with their nuts bearing on the inside of its vertical flange. In several places the bottom flanges of the girders have been tied together with 1-in. transverse rods with loop ends, pin connections, and sleeve nut adjustments.

Except that it was badly rusted, the bridge appeared, in 1900, so far as could be determined by a hasty inspection of the conveniently accessible parts, to be in serviceable condition, fairly well aligned and rigid under light traffic. It was built about 1870, and was said to have cost $50,000 besides an additional sum of $30,000 due to a washout during erection. A few years ago a transverse trestle bent was put under the bridge about 50 ft. each side of the center of the span to check the lateral vibrations. The cast-iron name-plate is inscribed, "No. 2, Patented Dec. 4, 1866, O. G. Leopold, Bridge Builder, Cincinnati, O." When this bridge was built it replaced a truss or arch span on the same site, and remains of foundations were discovered that indicated that a still earlier and shorter span had existed there of which there is now no record.

CHAPTER XXIX

PLATE GIRDER AQUEDUCT SPANS

Trenton Aqueduct. — The Delaware and Raritan canal is carried over four tracks of the main line of the Pennsylvania Railroad at Trenton, N.J., by a steel aqueduct which is supported by a construction virtually amounting to two skew plate girder spans of 74 ft., parallel to each other and about 31 ft. apart in the clear. The waterway, 33 ft. wide at the water line and $8\frac{1}{2}$ ft. deep, is carried in a rectangular trough of flat riveted steel plates, supported on floorbeams parallel with the abutments which are suspended from pairs of distributing girders web-connected to the main girders in each span. The main girders, 9 ft. 3 in. deep, are of ordinary construction with $\frac{3}{8}$-in. web plates, a top flange made with a pair of $6 \times 6 \times \frac{3}{4}$-in. angles and a full-length $20 \times \frac{1}{16}$-in. plate, and a bottom flange made with two $6 \times 4 \times \frac{3}{4}$-in. angles and a $20 \times \frac{1}{16}$-in. cover plate in the middle. The web plates are made in lengths of about $7\frac{1}{2}$ ft., each of which is divided into two panels by pairs of vertical web-stiffener angles for the outside girders. All the girders have sole plate bearings. The webs of the inside girders are stiffened on the outside only by pairs of $5 \times 3\frac{1}{2}$-in. vertical angles back to back, making T-shape cross-sections about 44 in. apart, and by a horizontal line of $3\frac{1}{2} \times 3\frac{1}{2}$-in. angles about 3 ft. from each flange.

The girders in each pair are connected by sway-brace frames and top and bottom lateral diagonals corresponding with ordinary deck spans, and the two pairs are independent of each other except for the connection by the floorbeams and the steel waterway trough. The floorbeam suspension rods are screwed up very tightly so that the top flanges of the beams are in close contact under pressure with the bottom flanges of the girders and increase the rigidity of the structure.

Thirty-two lines of 8-in. 30-lb. I-beams 12 in. apart, parallel with the girders, are supported on the top flanges of the floorbeams and on parallel abutment I-beams, and are covered with longitudinal $24 \times \frac{3}{8}$-in. plates, spliced between the I-beams with $5 \times \frac{3}{8}$-in. plates riveted on the under side. These plates form

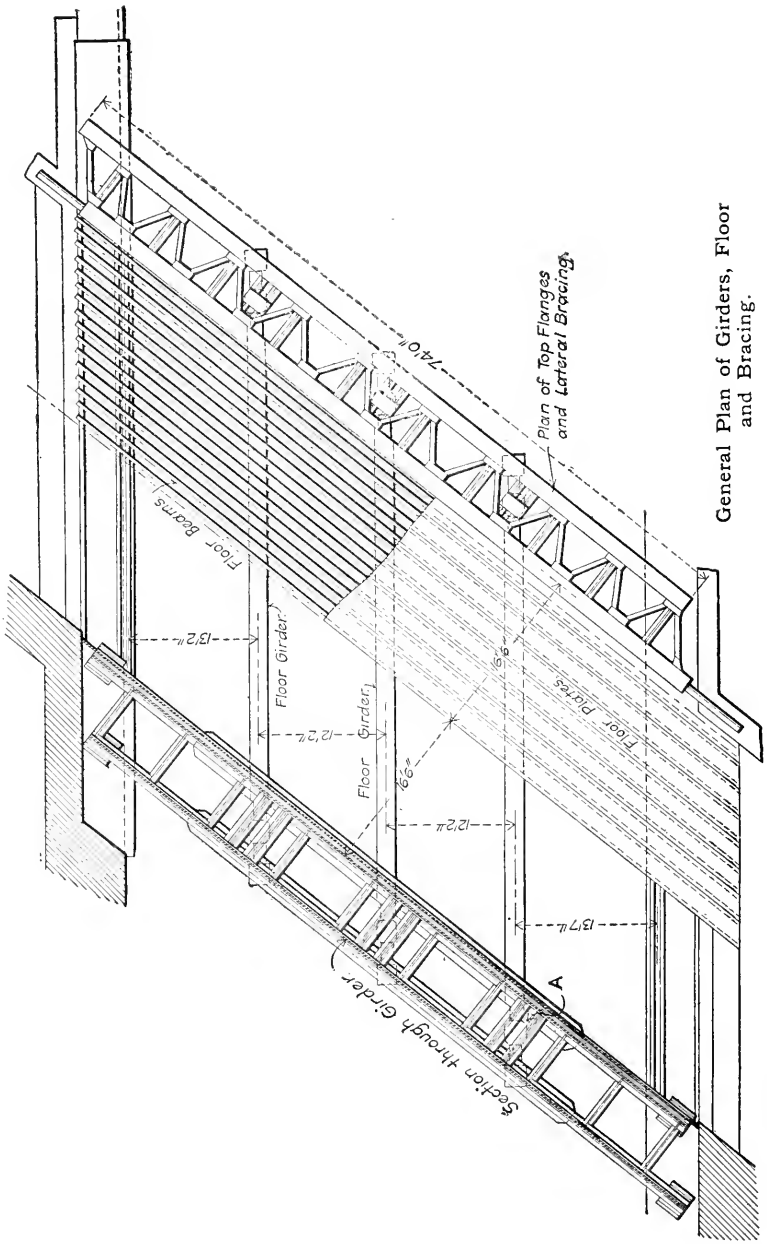

General Plan of Girders, Floor and Bracing.

the continuous bottom surface of the aqueduct, and the sides are made with $\frac{1}{4}$-in. vertical plates about $3\frac{1}{2}$ ft. wide, spliced by 2 × 4-in. T-bars on the outside and stiffened by three equidistant horizontal lines of inside 2 × 4-in. T-bars. The lower edges of

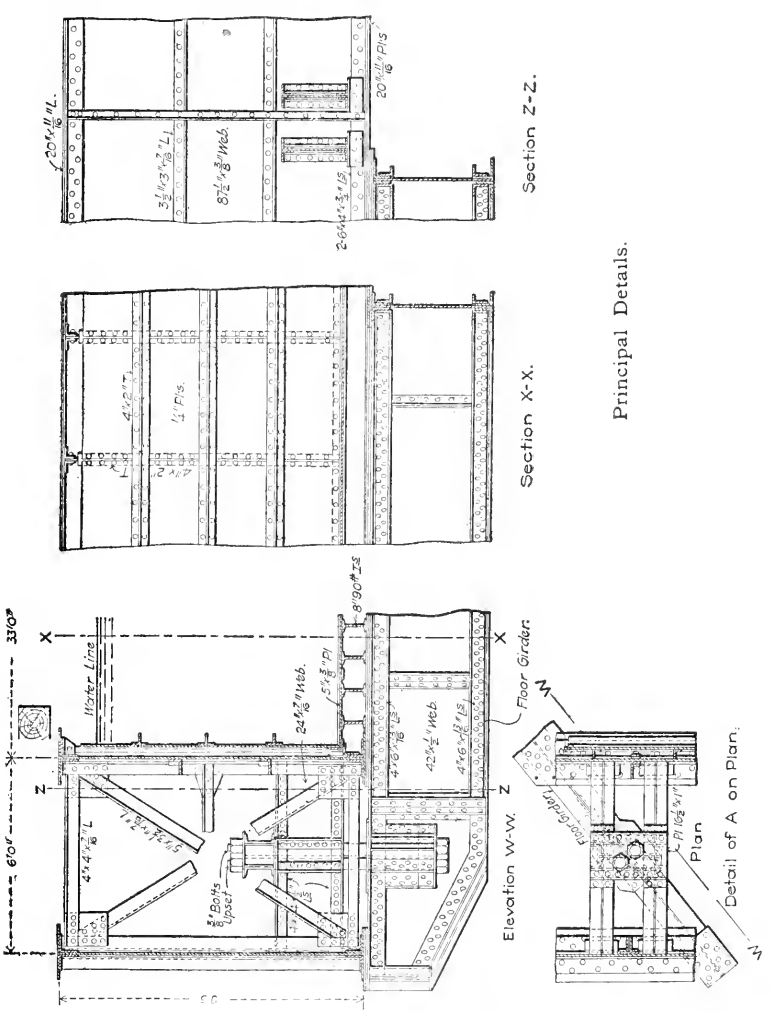

these plates are riveted to pairs of horizontal angles which connect them to the bottom plates of the aqueduct and to the lower flanges of the inside girders. They are also connected to the top flanges of the girders, and the 2 or 3 in. space between them and the girder webs is filled with asphalt.

A water-tight connection at each end of the aqueduct was made by driving a transverse line of sheet piles just beyond each abutment. The space between the abutment and the piles was rammed with puddle clay which extended in a thin sheet over the top of the abutment masonry to a brick stop wall in the middle of the latter. A plank platform was laid on top of the puddle close to the sheet piles, and the steel bottom plates projected beyond the ends of the longitudinal 8-in. I-beams over the brick

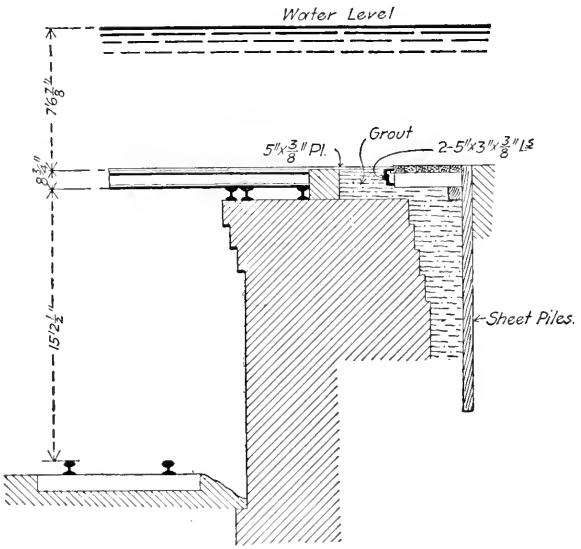

Floor Joint at Abutment.

Watertight Expansion Joint.

stop and the top of the puddle to rest on the planks and form an apron. Near the end of this apron, just clear of the edge of the planks, there is riveted to it the upper flange of a transverse built channel which extends across the canal, projecting down into the puddle where it is solidly grouted. A similar construction is extended up the vertical sides of the waterway and forms a tight joint which endures the slight expansion and contraction due to temperature changes. Each main girder weighs about 38,000 lbs., and the total weight of the aqueduct is about 434,000 lbs.

Port Byron Aqueduct.

The Erie canal is carried across the Seneca River at Port Byron, N. Y., by a steel aqueduct which consists of a riveted steel trough about 96 ft. long and 53 ft. wide, and 9¾ ft. high in extreme dimensions. It is supported on three transverse intermediate masonry piers and by the end abutments, which have

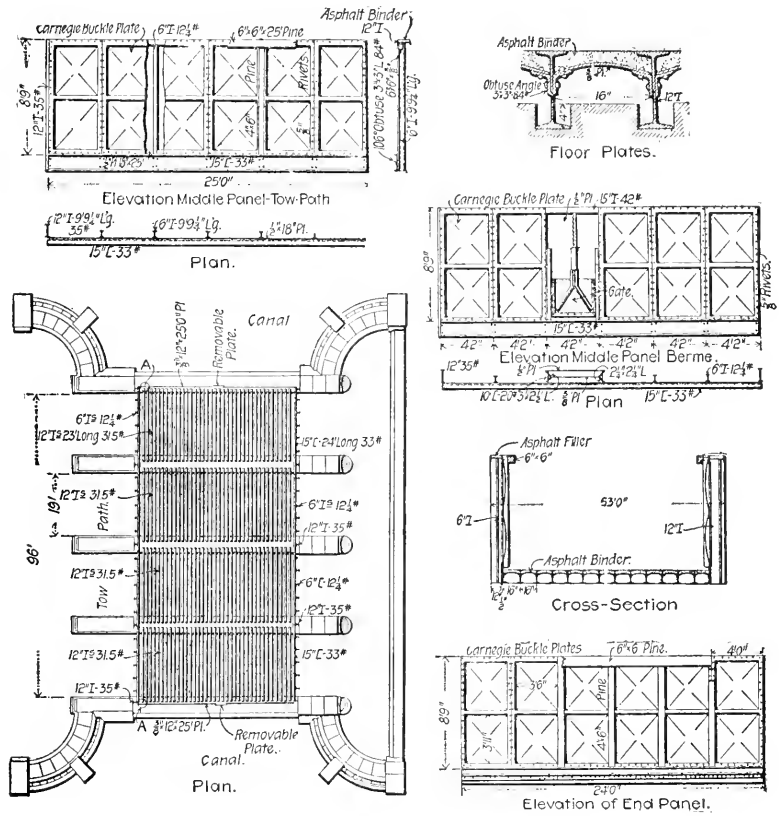

Plan and Details of Four-Span Aqueduct.

curved wing walls forming a masonry connection with the canal at either end. The aqueduct is built as a continuous riveted structure, and is provided with special connections to the cut stone masonry at the ends, where great care is taken to make watertight joints. At each end of the aqueduct transverse panels of removable steel plates are provided to make bulkheads by which

it can be cut out of the canal and the water excluded from it while the water contained in it is withdrawn through waste gates in the berme side, discharging into the river below, so as to allow inspection or repairs to the steelwork at any time with the minimum expense or interference with the canal traffic.

The design of the aqueduct consists essentially of a solid floor of segmental steel arch plates carried by 12-in. steel I-beams 16 in. apart, 23 ft. long, parallel to the axis of the structure. The sides are built of steel buckle plates, riveted at their vertical splices to 6-in. steel beams that are secured with top and bottom riveted bearings to heavy I-beams and channels extending continuously from end to end of the structure. All the joints are carefully calked, and the floor is surfaced up above the beam flanges with asphalt filling. The structure thus virtually consists of four successive short platforms, each of 19 ft. clear span, continuously connected to the two side walls 96 ft. long. The direct weight of the aqueduct and contents is carried almost entirely by the floor platform. The connections to the side walls are not designed to develop the strength of the side buckle plates as girder webs, and their construction is intended only to resist the lateral hydraulic pressure on the inside. With a depth of water of 7 ft. the total dead load sustained by the aqueduct, exclusive of its own weight, is about 2,123,000 lbs., which is, of course, a constant quantity, irrespective of any traffic which it may receive. The face walls of the abutment and the ends of the intermediate piers are built up to the level of the top of the superstructure, and at these points the vertical side beams are increased to 12 in. in depth, and are backed up to solid bearing on the masonry, which is thus enabled to receive a thrust from the inside hydraulic pressure, which is carried from pier to pier by the heavy horizontal longitudinal girders at top and bottom. The general plan shows the main members of the aqueduct with the steel buckle plates removed, and gives the outlines of the masonry without the tow-path platform, which is afterward to be built alongside the aqueduct. The bottom and sides are in general made of No. 3 Carnegie buckle plates $\frac{5}{16}$ in. in thickness and crowned about 3 in. each. The 4-ft. 2-in. $\times$ 8-ft. 9-in. regular sheets are stamped in two panels each and are riveted to the beam flanges by $\frac{3}{4}$-in. rivets, 6-in. pitch. The floor was riveted together in as large sections as could be conveniently handled by pneumatic hammers in a workyard established in the field about $1\frac{1}{2}$ miles from the site. The field connections were riveted

wherever possible and bolted through the remaining holes, the work being effected with considerable difficulty on account of the high water. The current was very swift, and it was necessary

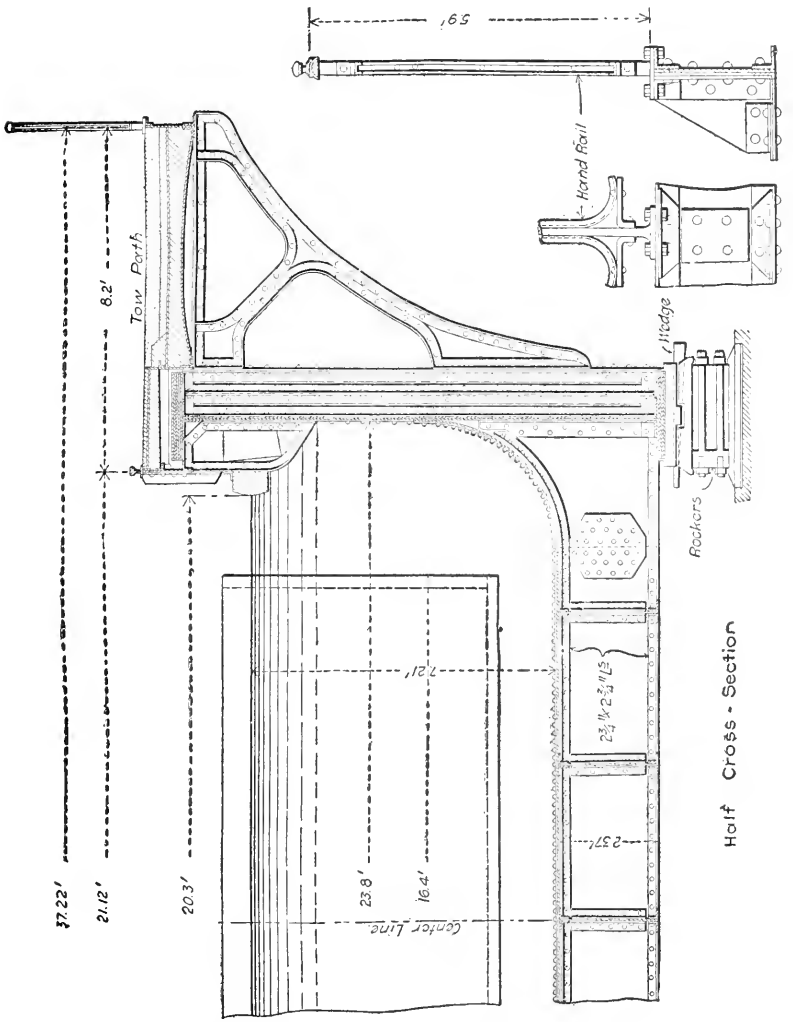

Floor and Trough Details and Bearing. — Briare Aqueduct.

for a man to lie on his back on a raft and go under the bridge where the headway was only one foot, and insert the bolts from below. After the work was assembled it was calked and painted with two coats and the asphalt floor lining applied.

Briare Aqueduct. — A very long, continuous plate girder structure is the aqueduct which carries the Briare canal across the Loire River, France. It is 2174 ft. long and 37½ ft. in extreme width. The two main girders are about 11 ft. deep and 24 ft. apart, and are built up in the usual way with 2¾-in. flange angles and 21-in. cover plates. Most of the girders are in spans of 131 ft., and all of them are successively riveted together with double-web splices 7 ft. long over the piers. The outsides of the girder webs are stiffened with three equidistant lines of double angles riveted together back to back to make T-bars, and by vertical built I-beams 14 in. deep and about 5 ft. apart which are each made of a plate and four small flange angles. Wide brackets are riveted on the outside and narrow ones on the inside of each girder to carry the tow-path and sidewalk respectively.

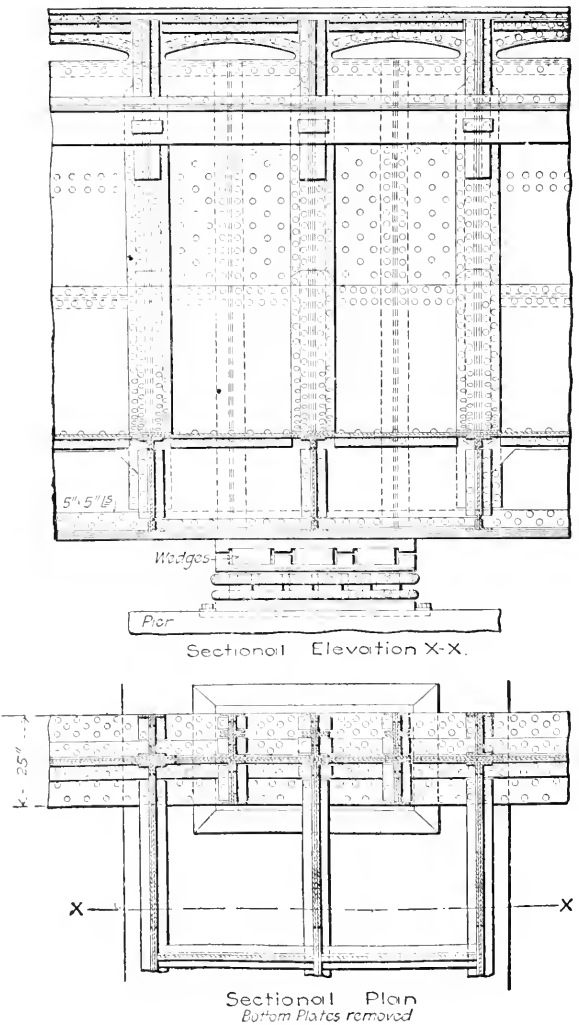

Trough Construction and Bearing.

The main girders are connected just above their lower chords by plate girder floorbeams about 30 in. deep and 5 ft. apart, and at the vertical web-stiffener points, which have their ends curved

upward to a tangent to the main girder web, and are riveted to it. The floorbeams are connected by five lines of short plate girder stringers of the same depth, and on top of them are riveted continuous $\frac{1}{4}$-in. plates which form the bottom of the aqueduct, and, following the curved ends of the floorbeam top chords, are riveted to the main girder web at about their middle line and calked. The aqueduct superstructure is fixed to the masonry piers at the middle and is supported by rocker pedestals at the other piers and abutments.

The maximum temperature movement of the aqueduct at one end is nearly 8 in., which is provided for by connecting the movable end of the trough to a short section fixed to the abutment. The two are joined by a rubber expansion sheet riveted under steel sliding plates. The two sections have a small clearance, and the space between them outside the rubber is filled with compressible packing. The steelwork weighs over six and a half million pounds, and cost about $250,000.

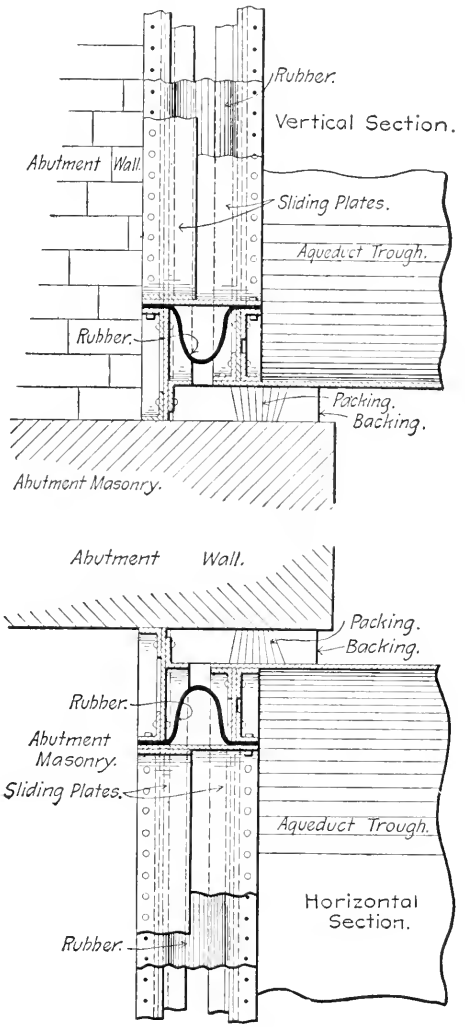

Expansion Connection at Abutment.

The steel troughs were assembled complete on a platform 360 ft. long on the river bank at one end of the aqueduct, and after two 131-ft. spans had been completed and riveted together there, they were launched forward in the usual French fashion, and another section added and moved forward, and so on, until

all were completed and in place. Seven spans were assembled and launched from the right bank of the river, and eight from the left bank; they met on the anchorage pier where they were riveted together. The aqueduct was supported during the launching on rollers on the piers and on the erection platform, all set in pairs under the centers of the main girders. There were five pairs of 20-in. rollers on shore, which were operated by ratchet levers 27 ft. long, swung about 18 ft. back and forth by gangs of eight men pushing against a crossbar that connected the tops of each pair of roller levers over the top of the girders. The men worked on an elevated platform above the aqueduct, and each movement of the levers advanced the girders 13 in.

CHAPTER XXX

CANTILEVER SPANS

Van Buren Street Bridge, Chicago. — The Van Buren Street highway bridge, Chicago, is a plate girder viaduct 200 ft. long and 50 ft. wide, which is peculiar both for the design of the steel structure and because it is wholly incased in a tile sheathing to protect it from the smoke of locomotives on the tracks of the

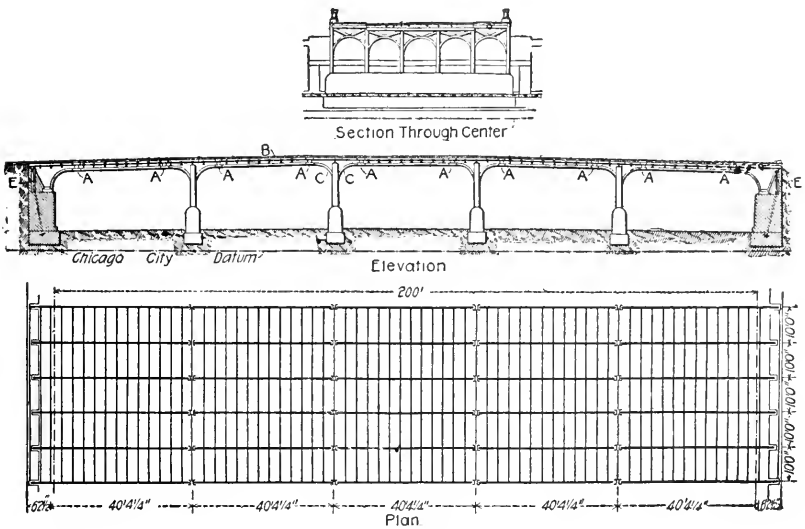

General Plan and Elevation.

Illinois Central Railroad, which it crosses, and to give it architectural effect. There are six lines of plate girders 10 ft. apart supported on heavy end abutments and on sixteen intermediate vertical columns about 21 ft. high above their masonry piers which rise several feet above the track level. The columns are placed 40 ft. $4\frac{1}{4}$ in. apart longitudinally, and have an H-shape cross-section made with four Z-bars and a web plate in the plane of the girders. About 7 ft. of the upper end of the web plate of each column is replaced by a field-riveted section 8 ft. $3\frac{1}{2}$ in. high and about $14\frac{1}{2}$ ft. long, which forms a double

bracket or balanced cantilever with horizontal top flange angles and curved bottom flange angles. The ends of these cantilevers are field-spliced to horizontal girders 24 in. deep and $27\frac{1}{2}$ ft. long which connect adjacent columns and make a continuous structure from abutment to abutment. In construction the spans are thus of the cantilever type, but in function they are continuous girders of arch type.

The supports are fixed at all columns and have roller bearings

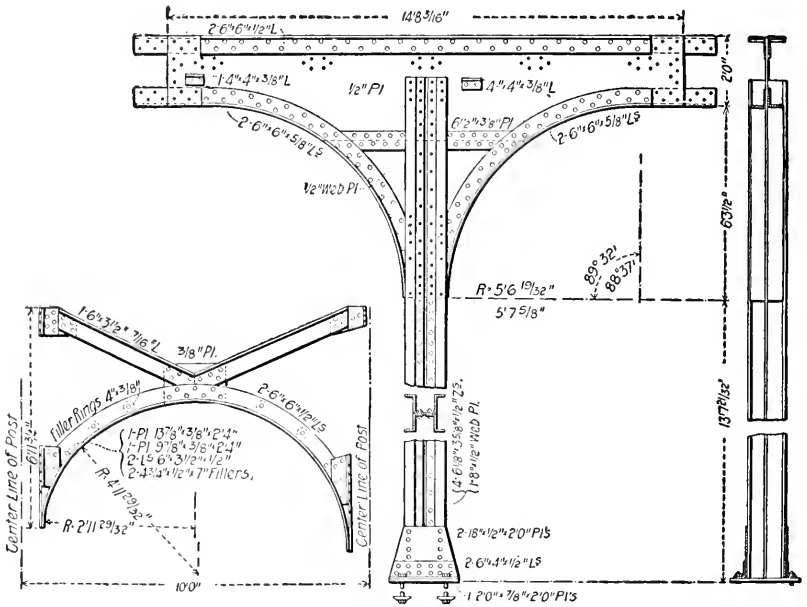

End Sections of Girders Integral with Columns.

at both abutments. At the abutments the ends of the girders overhang their pedestals and are anchored to the masonry by pairs of adjustable pin-connected bars with a short lever arm which engage long bars built solid into the masonry and having nuts on the lower ends bearing on reaction plates. These masonry rods are slightly inclined from the vertical, and at their upper ends take bearing in slotted thrust castings bedded in the top of the masonry. The tops of the columns are braced transversely by pairs of curved and oblique angles like portals, and the girders are web-connected to 10-in. transverse I-beams about 3 ft. apart which carry hollow tile, end-construction arches

with a concrete floor. The arches are 6 in. thick, with a 6-ft. radius, and are made of salt-glazed tile with a minimum thickness of $\frac{3}{4}$ in. set in 3 : 1 Portland cement mortar. The columns and all other steelwork below the floor arches are completely inclosed in glazed tiles locked or anchored to it, and all joints are very carefully pointed so as to completely seal up the steel. This gives the bridge the effect of a series of longitudinal and transverse solid masonry arches, sprung from the tops of masonry columns, and carrying the short-span transverse floor arches. The continuous top flanges of the girders are curved to a radius of 2500 ft., giving them a center camber of 2 in. in 200 ft., and additional camber, calculated to be exactly equal to

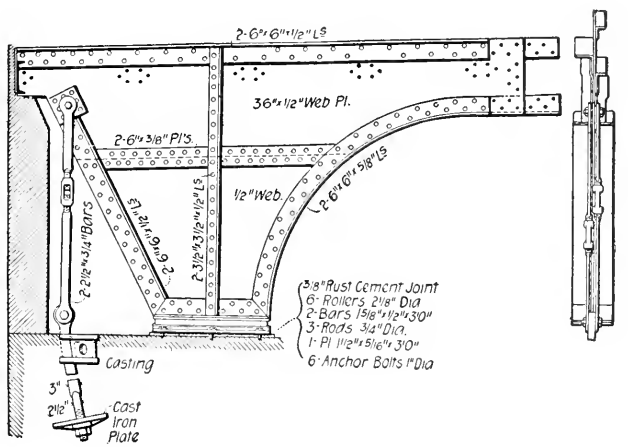

Abutment Ends of Girders and Anchorages.

the dead load deflection, was framed into the girders. A similar viaduct was built at Harrison Street.

Benton Boulevard. — Benton Boulevard, Kansas City, crosses the two tracks of the Kansas City Belt Railway Company at an angle of about 83½ degrees on a deck bridge about 126 ft. long over all, and 68 ft. wide. It is designed for a 40-ft. roadway and two 14-ft. cantilever sidewalks. The three lines of plate girders were erected as double cantilevers with unequal arms, and connecting center spans supported by two trestle bents with three vertical columns each, thus giving a center opening of 64 ft., and two side openings of 29½ ft. The latter are spanned by the anchor arms which, at the abutments, have pin bearings engaging vertical eyebars connected to reaction platforms built into the masonry. The center opening is spanned by girders which

are made with arched lower flanges so as to secure a minimum depth of web in the center, and afford maximum clearance there over the railroad tracks. This span was erected with two cantilever arms 12 ft. long, and a connecting span 40 ft. long. The sections forming each adjacent anchor and cantilever arm were riveted up solid in the shops, and shipped as single girders about 43 ft. long, and their connections to the center spans were made with solid field-riveted splices, so that in service each line of girders consists of three continuous spans with rigid joints, and deep riveted connections to the vertical posts of the intermediate bents.

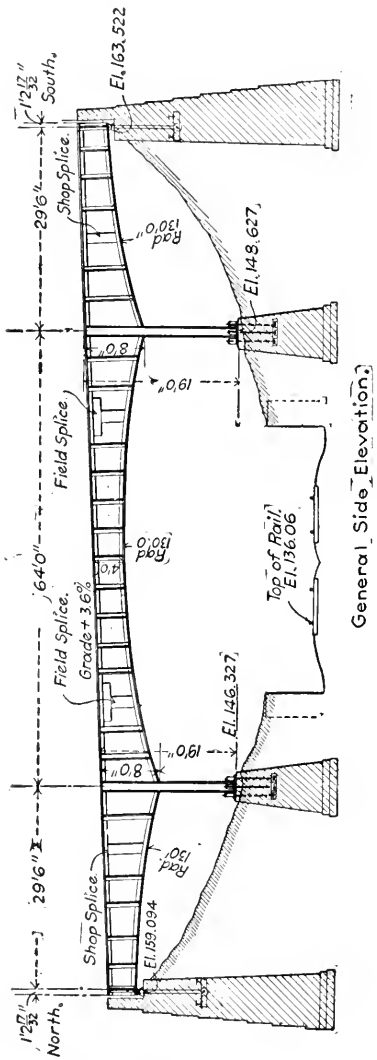

Main Girders and Supports.

The girders are connected by floorbeams parallel with the abutments, and about 15 to 16 ft. apart. The panels between the floorbeams are X-braced by horizontal $6 \times \frac{1}{2}$-in. bars riveted to the upper flanges of the girders, floorbeams and 15-in. stringers 4 ft. apart. The stringer webs are connected by 1-in. tie rods about 4 ft. apart, and their lower flanges support flat arches of hollow terra cotta blocks covered with concrete filling and an asphalt pavement. Plate girder cantilever brackets 9 ft. long are web-connected to the girders on both sides of the bridge, and carry the stringers, which are seated on their top flanges to raise the surface of the sidewalks about 6 in. above that of the roadway. The sidewalk floors have a cement surface carried on flat arches of hollow terra cotta similar to those in the roadway, but only 10 in. thick.

The field splices of the main girders are made with six vertical rows of rivets for the web; the top chord is spliced with a pair of side plates having six horizontal rows of rivets and with a cover plate having four rows: the bottom flange is spliced with a pair of cover angles and a cover plate, having altogether two rows of rivets in the sides, and four through the flange. At the deepest part of the girder, where it is supported by the vertical posts, the web is reinforced by side plates and angles, and is shop-riveted to a transverse diaphragm with flange angles on both the vertical edges. This diaphragm provides for the connection with the webs of the vertical columns in the bents supporting the

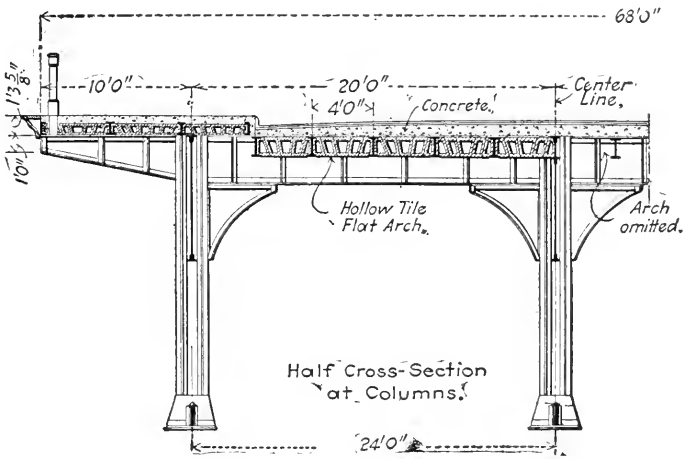

Transverse Bents.

girder. The column channels extend to the top flange of the girder, which passes between them, and is field-riveted to them through the diaphragm flanges. The joint between the column and the inclined lower flanges of the girder is covered with bent plates shop-riveted to the girder flanges and field-riveted to the column flanges. The anchor ends of the girders have vertical side plates riveted to the end web-stiffener angles, and projecting below the lower flange, where they have horizontal flange angles and base plates riveted to them to form pedestals for the seat on the masonry. The pins through these pedestals engage the upper ends of single 6 × 1-in. eyebars 10 ft. long, which pass through a slot in the base plate and engage, at the lower end, pins in reaction I-beams built into the masonry.

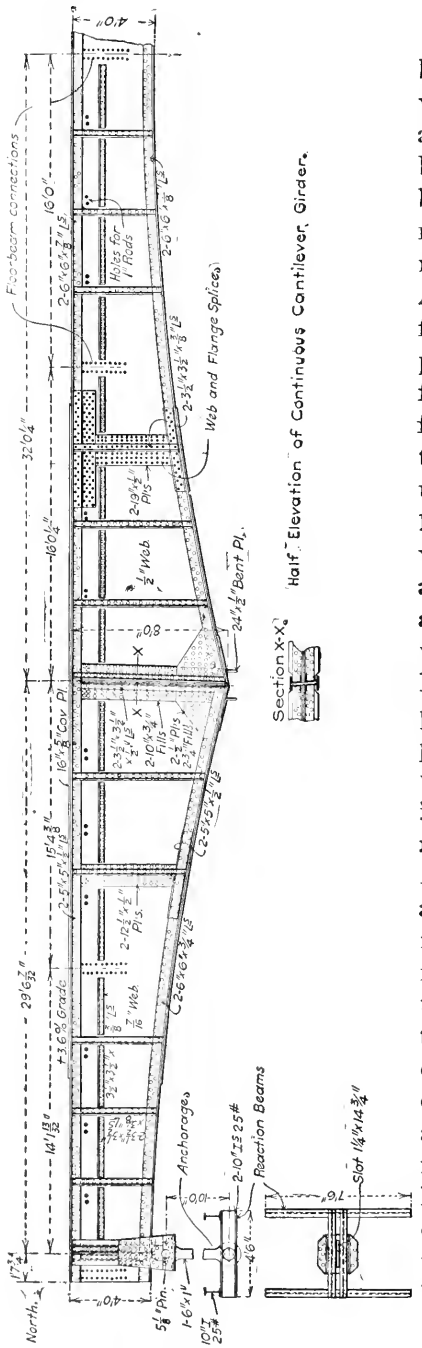

Materials and Details of Girder.

At the trestle bents the floorbeams are web connected to the webs of the post channels and are seated on long solid-web knee-braces. The intermediate floorbeams are web-connected to the main girders, and the upper corners are sheared at an angle of 45 degrees to clear the top flanges of the girders. Tension plates are riveted across the top flange of the girder and of the floorbeam and sidewalk brackets to splice the latter. The columns in the trestle bents have I-shaped cross-sections made with a web plate and four angles and a pair of channels. They are anchored to the masonry with four 1⅝-in. upset bolts, 6 ft. long, engaging cast iron reaction plates built into the concrete piers. Except the anchorbolts, which are soft steel, the bridge is built of medium steel, and all rivet holes are reamed $\frac{3}{16}$ in. All intermediate stiffener angles are crimped, and the ends of the floorbeams and stringers are faced. All field connections of the main girders and floorbeams to the columns were reamed to cast iron templates. All abutting ends of compression members are faced. The piers and abutments are built of 1 : 3 : 5 Portland cement concrete. The exposed angles of the concrete were rounded to a radius of 3 in. The coping is of 1 : 2 : 3 concrete.

Harvard Bridge. — Harvard Bridge, over Charles River,

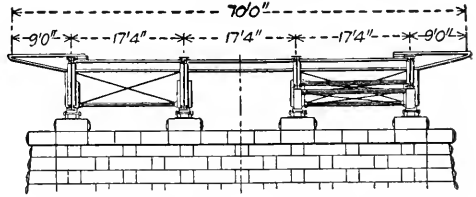

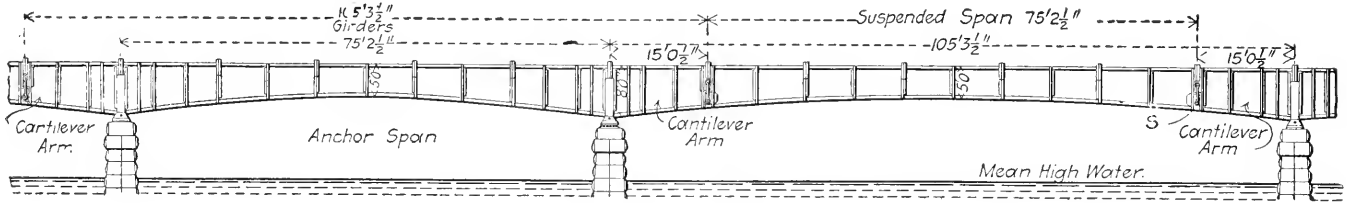

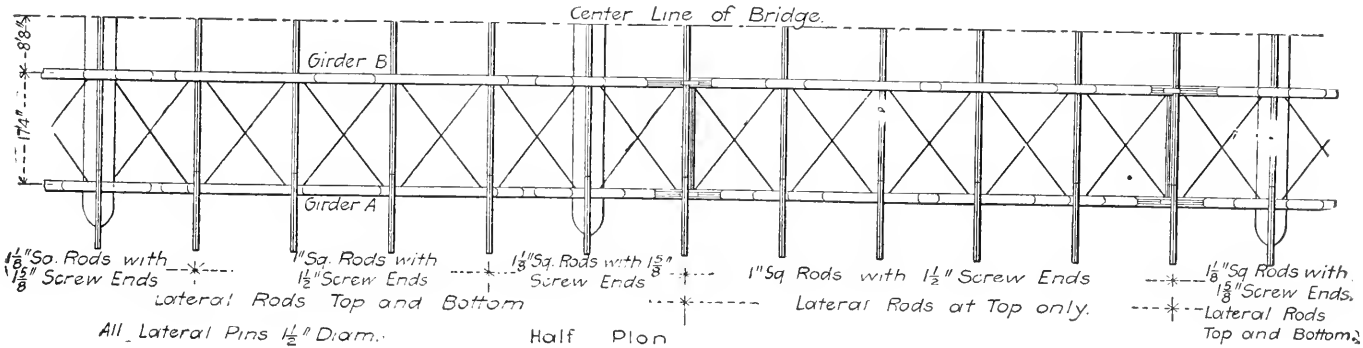
Center Line of Bridge.
8'8¾
17'4"
Girder B
Girder A
1⅛"Sq. Rods with 1⅝" Screw Ends
1"Sq. Rods with 1½" Screw Ends
1⅛"Sq. Rods with 1⅝" Screw Ends
1"Sq Rods with 1½" Screw Ends
1⅛"Sq Rods with 1⅝" Screw Ends.
Lateral Rods Top and Bottom
Lateral Rods at Top only.
Lateral Rods Top and Bottom.
All Lateral Pins 1½" Diam.
Half Plan

Harvard Bridge.

between Boston and Cambridge, Mass., is an iron plate girder highway structure, 2165 ft. 7 in. long, and 70 ft. wide over all. The substructure consists of twenty-four masonry piers, with pile foundations and two masonry abutments. The superstructure consists of twenty-five plate girder spans of which ten are 75 ft. $2\frac{1}{2}$ in. long, eight are 105 ft. $3\frac{1}{2}$ in., one is 87 ft. 9 in., and one is 57 ft. $3\frac{5}{8}$ in. long on centers of piers, and two are 86 ft. 3 in., besides a 157-ft. 2-in. revolving draw span, with two openings of 36 ft. in the clear. The draw is nearly in the

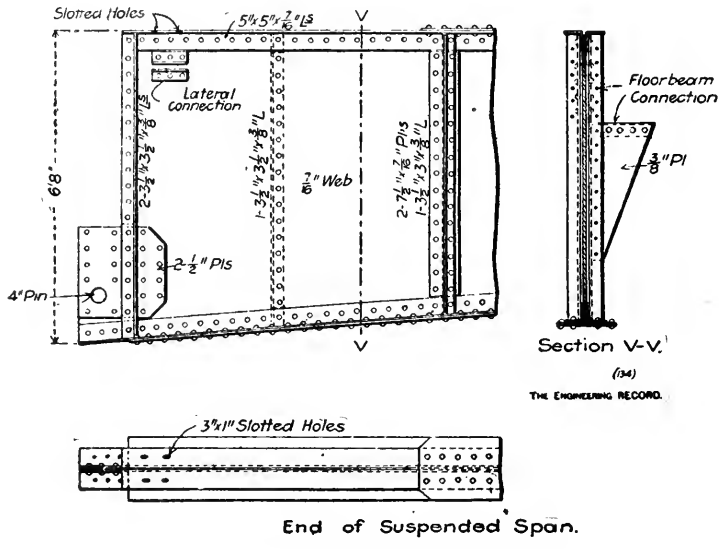

End of Suspended Girder.

middle of the river, between piers 11 and 12, and on each side of it main girders are continuous to the abutment.

The 75-ft. $2\frac{1}{2}$-in. spans alternate with the 105-ft. $3\frac{1}{2}$-in. spans, and the girders of the former project 15 ft. $\frac{1}{2}$ in. beyond the pier centers, at each end forming cantilever arms, from which the ends of connecting girders 75 ft. $2\frac{1}{2}$ in. long on centers are suspended by pairs of eyebars, and complete the three-section 105-ft. $3\frac{1}{2}$-in. spans. There are four main lines of girders 17 ft. 4 in. apart, which are connected by floorbeams 15 ft. $0\frac{1}{2}$ in. apart, and by two sets of lateral rods and sway-bracing, one set between the outer pair of girders on each side of the bridge axis. The girder seats on successive piers are alternately fixed and rolling. The roadway is level between piers 6 and 17 and beyond them

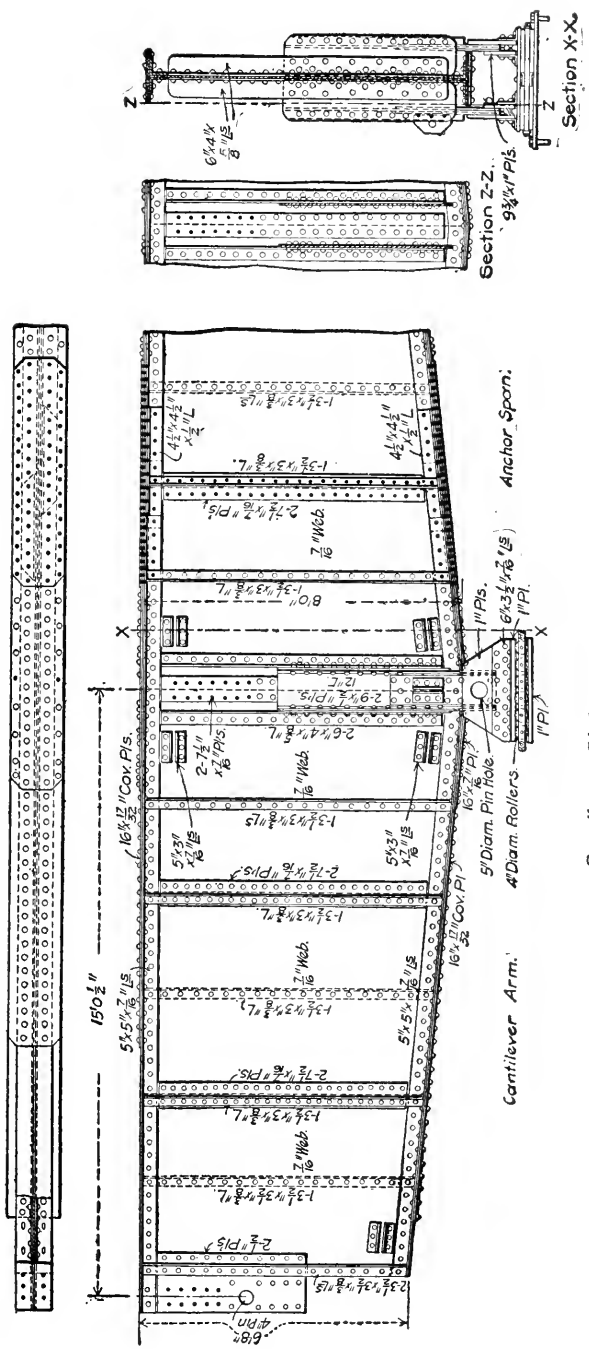

Cantilever Girder and Pier Support.

has a vertical curve and grade down to each abutment. There is one 46-ft. driveway and two 12-ft. sidewalks partly supported on the 9-ft. cantilever extensions of the floorbeams. The rollers are of steel; all other parts of the superstructure are of wrought iron, which was specified to have ultimate strength, elastic limit and elongation as follows: for channels and angles, 47,000 lbs., 24,000 lbs., and 15 per cent; for plates 20 in. wide and under, 48,000 lbs., 24,000 lbs., and 12 per cent; for web plates of main girders, 46,000 lbs., 23,000 lbs., and 5 per cent; suspension link eyebars, 49,000 lbs., 25,000 lbs., and 20 per cent. Main pins were fitted to $\frac{1}{50}$ in., lateral pins to $\frac{1}{32}$ in., and field splices of the girders were assembled at the shops.

All girders have horizontal top flanges, curved bottom flanges and are 8 ft. deep at the piers and 5 ft. deep at mid-span. All girder supports are pin-connected, and the center spans have suspended web bearings. The plate girder floorbeams are web-connected to the main girders, and are also seated on kneebrace brackets. Their top flanges clear the under sides of the girder top flanges, and are spliced to the sidewalk cantilevers over the outer lines of girders. The laterals in the planes of the top flanges consist of single rods 1 in. and $1\frac{1}{8}$ in. square with loop eyes and sleeve nut adjustments. The sway-bracing consists of pin-connected bottom struts and diagonal rods in the floorbeam planes.

The 105-ft. $3\frac{1}{2}$-in. girders are supported on pins at points 15 ft. $0\frac{1}{2}$ in. from each end over the centers of the piers, 75 ft. $2\frac{1}{2}$ in. apart (see pp. 207–208). At these points there are two pairs of vertical 6 × 4-in. web-stiffener angles 9 in. apart with 9-in. channels riveted between 12-in. plates on their outstanding flanges, and projecting below the girders to form jaws which are bored for 5-in. pins transverse to the girder webs. The pins take bearing in fixed and roller shoes of the ordinary riveted type with pairs of webs on each side, having clearance for the jaw plates between them, so as to reduce the bending moments to a minimum. The girder webs are $\frac{3}{8}$ in. thick in the center, and $7\frac{1}{6}$ in. thick at the ends and over the piers, and are made in sections 5 ft. long spliced together with double $7\frac{1}{2}$-in. cover plates. They are stiffened with pairs of vertical angles at the splices, and with single angles on opposite sides of the web alternately, midway between splices. The flanges are made with pairs of 5 × 5-in. angles, reinforced top and bottom with four thicknesses of 16-in. cover plates of different lengths. The

cover plates have two rows of rivets through the flange angles, and two rows of rivets outside them. The flanges are spliced with $4\frac{1}{2} \times 4\frac{1}{2}$-in. cover angles and 16-in. cover plates 5 ft. 8 in. long. The girders were shipped in three sections each, with field-riveted splices. The end sections were 20 ft. $0\frac{3}{4}$ in. long, and had their webs notched at the outer ends so as to overhang and match the ends of the center 75-ft. center spans which were suspended from them by a pair of 4×1-in. eyebars 3 ft. long, on centers with 4-in. pins (see p. 212). The flanges were also connected across the joints by $10 \times \frac{1}{2}$-in. cover plates 31 in. long, which were field-riveted to one girder and bolted through slotted holes to the other girder. The girders at the ends of the bridge correspond with the intermediate ones except that they rest on cast bed plates anchored to the abutment masonry. Base plates riveted to the lower flanges bear on three longitudinal strips on the upper surfaces of the bed plates, and are notched on both edges to engage projecting spurs which permit slight longitudinal displacement, and prevent any transverse motion.

Riverside Drive. — The northern extension of Riverside Drive along the Hudson on the west side of Manhattan Island, New York, is from 40 to 60 ft. above the adjacent tracks of the New York Central & Hudson River Railroad, which lie in the narrow space between it and the river. Trinity Cemetery extends to the right-of-way of the railroad company, where the west property line was bounded by an old retaining wall about 15 ft. in height, with a nearly vertical face close to the tracks. A strip of land parallel to this wall and 50 ft. in width was all that could be secured from the Trinity authorities for the driveway, and as it was impossible to move the railroad tracks, difficulty was experienced in providing the minimum width of 150 ft. for the driveway. This was finally accomplished by building a steel platform about 693 ft. long from end to end of the cemetery to support the driveway.

This platform is 100 ft. wide for 377 ft. in the middle, where the driveway is on a tangent, and is narrower at both ends, where the driveway curves inward and away from the railroad tracks. It consists essentially of a bridge floor carried on a system of transverse cantilever plate girders 10 ft. deep, 100 ft. long, and 20 ft. apart on centers. They are all seated at or near the middle point on the coping of the retaining wall about 60 ft. above the surface of the adjacent tracks. This support

serves as a fulcrum, beyond the center of which one end of each of the middle girders cantilevers 48½ ft., carrying part of the roadway and one sidewalk above the railroad tracks. The other end of the girder is supported on a retaining wall for the east side of the driveway, which has an average height of about 40 ft. above the present surface of the ground in the cemetery. Each girder is anchored at this end by a pair of long vertical rods 1⅞ in. square with upset ends.

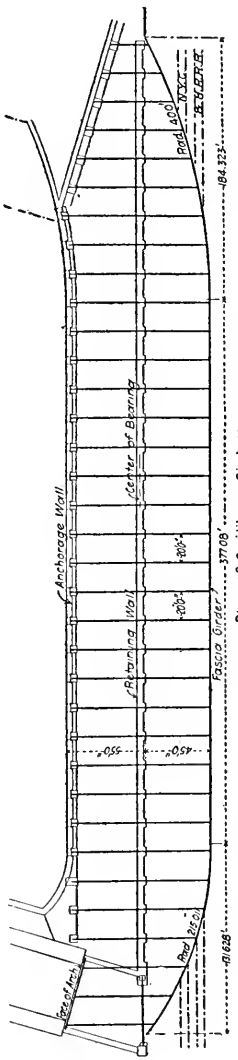

Both retaining walls are of concrete faced with rock-faced granite ashlar, battered 1 : 12 and offset on the rear in steps 18 in. wide, and carried down to solid rock. The girders have ¾-in. web plates and pairs of 6 × 8 × 1-in. flange angles reinforced by 20-in. cover plates ¾ in. and ⅞ in. thick. At the fulcrum the rib is reinforced to a thickness of 1¾ in. for a length of 12 ft., and has several pairs of large vertical stiffening angles which virtually form a column connecting the top and bottom flanges on the center line of the bearing. The bearing is made with a four-web shoe having a base plate nearly 3 ft. wide (see p. 181). This projects about 7 in. each side of the bottom flange plate, and is stiffened on the edges by the lower ends of special transverse diaphragm plates and the bent ends of the vertical web stiffeners of the girder which are connected to it, as shown in the detail. The shoe has half-hole bearings on a 7-in. pin in the top of a pedestal with a 4 × 4½-ft. base, which is seated on a nest of twelve 4-in. rollers secured by the ordinary top and bottom guide plates.

At the anchor end of the girder, horizontal bearing is provided for the anchor rod on each side of the web on the upper ends of pairs of vertical angles which distribute the reaction

stresses through rivets in the girder web. The rods are about 30 ft. long, and their lower ends pass between the webs of a pair of 20-in. I-beams, and their nuts engage bearing plates on the

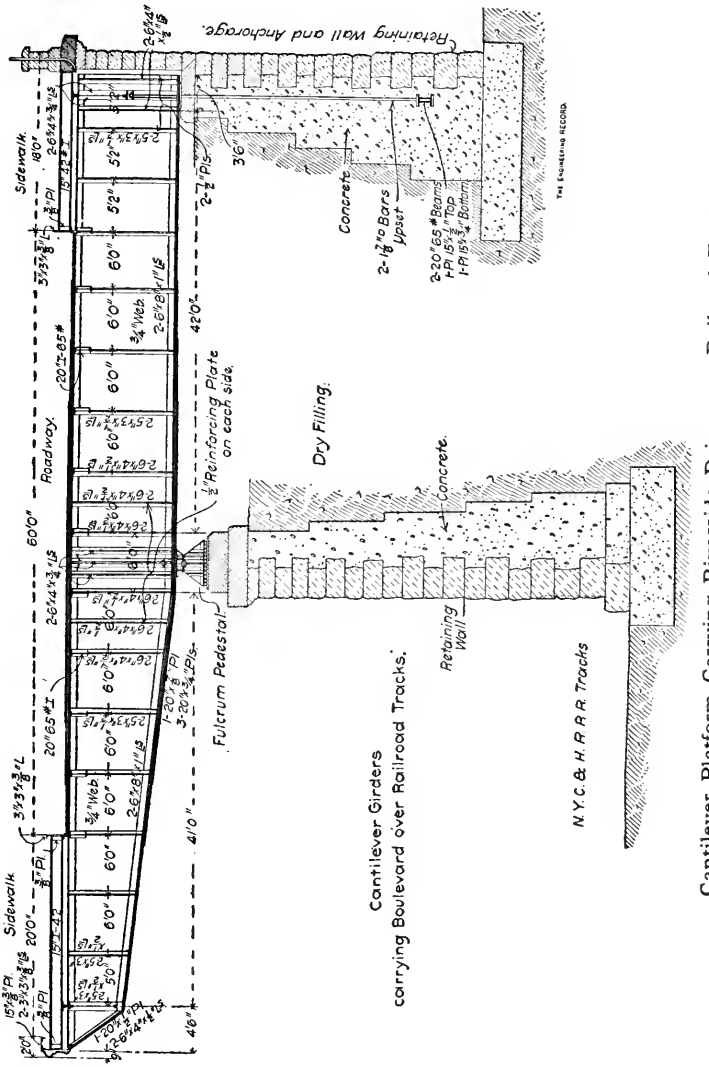

lower flanges of the beams. The beams are spliced together to make a continuous member built into the rubble masonry of the retaining wall and sealed with grout or concrete. The girders have an estimated weight of 50 tons each. They are connected

by three lines of lattice girders at right angles to them at both ends and at the fulcrum. These girders are about 8½ ft. deep for the center line, 5½ ft. deep for the outside line, and 4½ ft. deep for the anchorage line, all of them having their top flanges at nearly the same level as the top flanges of the main girders. The fulcrum line does not carry any portion of the roadway, but the two end lines help carry the transverse beams for the sidewalks. The girders are also connected by a series of longitudinal 20-in. I-beams 6 ft. apart for the 60-ft. roadway, and by X-bracing of six single 5 × 3-in. and 6 × 3-in. angles in the planes of the top flanges. At the ends of the platform the lengths of the girders are decreased and their dimensions vary accordingly. The total estimated weight of steel in this viaduct is about 4,000,000 lbs., and it conforms in materials, tests, and shopwork to standard railroad-bridge specifications.

Electric Car Bridge, Newark. — The crossing of the double tracks of the Consolidated Traction Company over two skew tracks of the Delaware, Lackawanna & Western Railroad between Jersey City and Newark, N.J., is a rather complicated plate girder viaduct which has some peculiar features of arrangement and construction. The tracks are carried on very narrow separate structures which are independent except for wind-bracing. Their ends are offset about 150 ft. longitudinally, each one is supported on square towers and oblique and square single bents, and has regular square short spans of I-beam approach girders and skew spans of long plate girders reversed on opposite sides of the same track. The plate girders are tapered, and both top and bottom flanges are inclined. The long spans consist of a cantilever arm and a suspended end girder, and the ascending and descending grades are very different, so that the opposite tracks are at different heights in the same transverse planes, and the cross-struts are steeply inclined.

The bridge was designed for four 15-ton electric cars on 6-ft. 6-in. wheel bases 6 ft. apart, and is built of medium steel proportioned for maximum stresses of 10,900 lbs. per sq. in. and an ultimate minimum strength of 60,000 lbs. per sq. in. The girders for each span are 5 ft. apart on centers, and the ties are laid across their top flanges. The summits of the grades are near the centers of the longest spans, and the inclined top flanges are connected there by vertical curves; thus keeping the elevation as low as possible to secure the required headway above the railroad tracks.

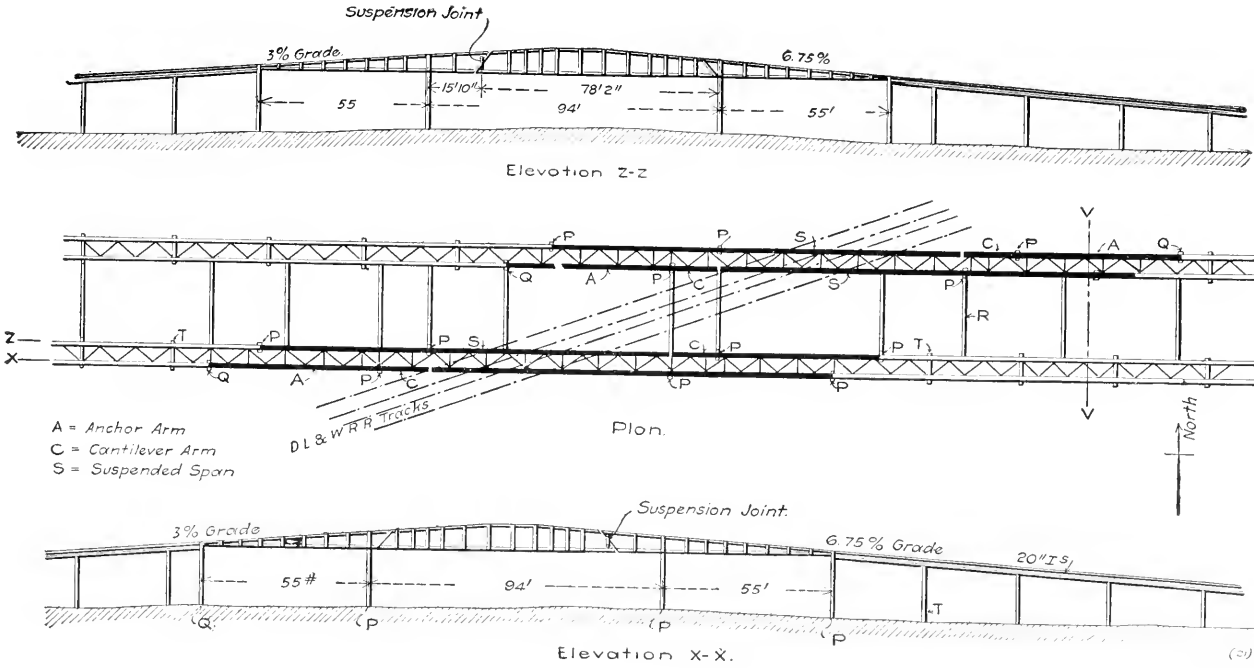
Suspension Joint
3% Grade
6.75%
15'10"
78'2"
55
94'
55'
Elevation Z-Z
A = Anchor Arm
C = Cantilever Arm
S = Suspended Span
D L & W R R Tracks
Plan.
North
Suspension Joint
3% Grade
6.75% Grade
20" I S.
55#
94'
55'
Elevation X-X.

The lengths and positions of the longest spans are determined by the locations of the supporting single vertical columns which are set as close together as possible and clear the railroad tracks. This brings them about 94 ft. apart and very much skewed, as shown at points marked *P P P P* in the plan. To reduce the length and weight of the girders, the center span was made with cantilever arms nearly 16 ft. long, and supported girders about 78 ft. long with one end carried by a vertical column and the other end suspended from the cantilever by a pin-connected link.

The long girder is free to move longitudinally at both ends, and in order to keep the ties square, and have none of them resting on fixed and movable girders at opposite ends, the cantilever arms were made equal to the skew of the crossing and were placed symmetrically, on opposite ends of the span in the two lines of girders for each track, thus bringing the movable girders directly opposite each other. The adjacent ends of the cantilevers and suspended girders are cut at an angle of about 45 degrees and connected by a pair of vertical $\frac{5}{16}$-in. links and 3-in. pins (see p. 210).

At the opposite end of the 78-ft. girder its lower flange rests on a horizontal column seat to which it is connected by bolts through slotted holes (see p. 143). A bearing to resist upward reaction is provided by a horizontal reinforced angle shelf engaging the lower flange of a horizontal transverse channel riveted to the column web. As the column could not be satisfactorily braced to the nearest one under the opposite girder on account of the serious longitudinal stresses which would be induced by the great skew, it was made very stiff to have independent stability, and was built of two 15-in. I-beams riveted together at right angles to have a T-shape cross-section and resist flexure in both directions. One beam was capped to receive long girder, and the other beam was extended up to the top flange of the girder, and field-riveted through the web to the end vertical angles on the 55-ft. girder of the side span. The 15-ft. 10-in. cantilever arm is web-connected to the end of the 55-ft. anchor span girder by field rivets through the end web-stiffener angles of both and the web of the column which separates them.

The top flanges of these girders are spliced for tension by a long projecting cover plate and cover angles, which are field-riveted. The columns *Q Q Q Q*, which support the low ends of

the anchor spans, and the opposite columns *T T T T*, which support the low ends of the corresponding 55-ft. approach girders, are skewed as shown in the plan and elevations, and are made similar to columns *P* so as to resist flexure in both directions without bracing. All other pairs of columns are set square, and have transverse bracing of the usual horizontal and diagonal

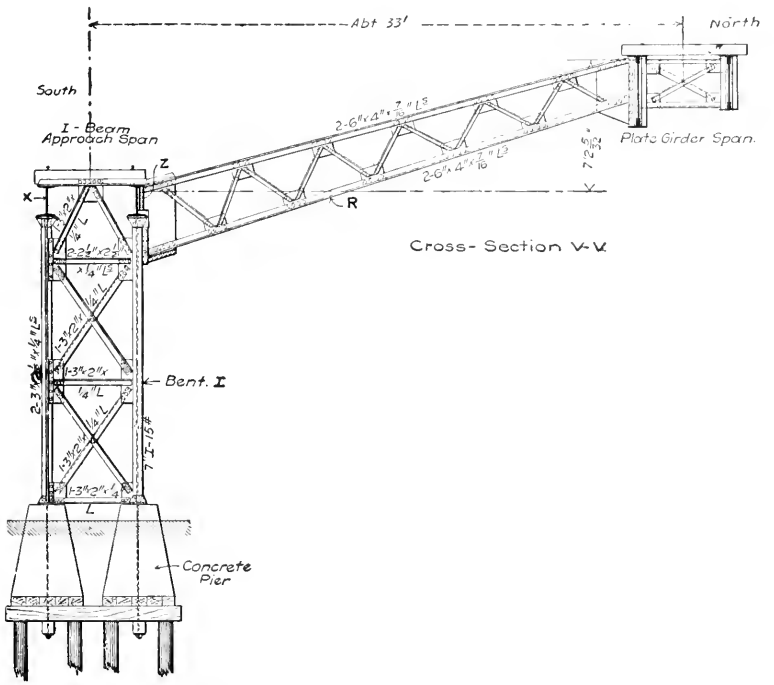

character, and are braced in pairs longitudinally, so as to make towers and single bents.

St. Louis, Keokuk & Northwestern Bridge. — On the St. Louis, Keokuk & Northwestern Railroad, there are two single-track double cantilever deck plate girder bridges, each 101 ft. long over all, and supported on cylinder piers 80 ft. apart, center to center. The girders overhang the piers about 10 ft. at each end, with the lower chords of the overhangs sloped up to the ends so as to clear the slope of the embankments beyond the piers.

CHAPTER XXXI

MISCELLANEOUS EXAMPLES OF PLATE GIRDER CONSTRUCTION

Old Baltimore & Susquehanna Railroad Span. — A very curious plate girder span of 54 ft. was built for the Baltimore and Susquehanna Railroad in 1846, and is believed to have been the first plate girder in this country, and one of the first in the world. Each girder was double-webbed, 6 ft. deep, and made of $\frac{1}{4}$-in. iron plates 38 in. wide, with vertical lap-riveted joints. The top and bottom flanges were made by riveting 5 × $\frac{3}{4}$-in. reinforcement bars to the upper and lower

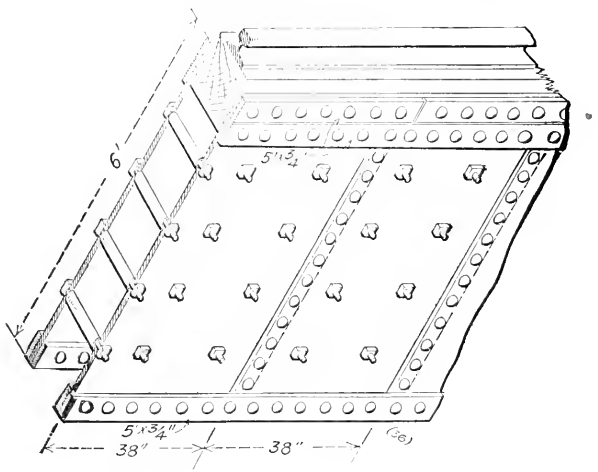

Section of Double-Web Old Girder.

edges of the web plates. They were in 12-ft. lengths, but jointed in the top and welded in the bottom chords. The two webs of each girder were spaced 12 in. apart, and fastened together by $\frac{5}{16}$-in. bolts pitched 12 in. vertically and horizontally, and passing through cast iron thimbles. Wooden longitudinal stringers were bolted between the top flange plates of each girder and received the track rails. The vertical and horizontal sway and lateral diagonals were composed of single $\frac{3}{4}$-in. rods clamped together at intersections by pairs of small cast iron disks, and there were top and bottom transverse struts.

In 1864 the girders were separated to a distance of 16 ft. between centers, and were used for a double-track bridge until 1882. In the new arrangement, vertical stiffening pieces about 6 ft. apart were bolted on the outsides of the webs, and the cross-ties were laid on top of the top flanges, and the outer rail of each track was laid over the center of the girder, on a shallow longitudinal stringer. The ends of the girders were seated on transverse timber sills, and the lower flanges were reinforced by additional flat bars about 20 ft. long riveted to the webs just above the flange bars in the middle of the span.

Old New Brunswick Span. — A curious old single-track railroad bridge in New Brunswick, which was probably built in England, and was replaced a few years ago by a modern struc-

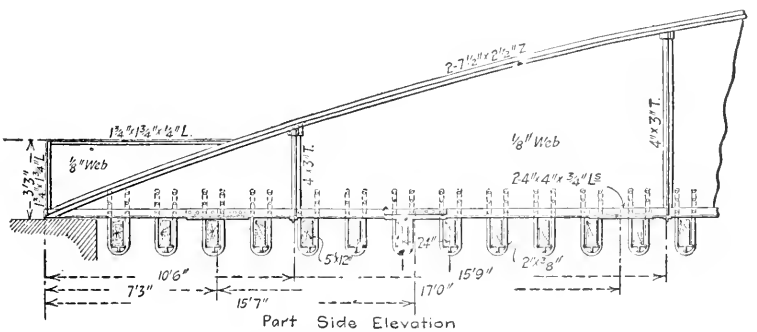

Ancient Bow-String Plate Girder.

ture, had a 103½-ft. through span with two bow-string plate girders, 10½ ft. deep in the middle and 14½ ft. apart on centers, and was remarkable for the thinness of the web and the peculiar floorbeam connections. The curved top flange, 15 in. wide and 5 in. deep, was made of two Z-bars, apparently braced at panel points by flanged triangular cast iron brackets riveted to the web and forming transverse diaphragms. The 17-ft. horizontal bottom flange angles were spliced by flat bars on each flange, and intersected the top flange at the ends of the span where the web projected beyond the top flange, and was extended to form a sidewalk-guard across the abutment. The web was made of vertical strips of 36 × ⅛-in. plates, lapped 3 in. and having a single row of $\frac{5}{16}$ in. rivets, 2½ in. pitch at each joint. It was divided into panels from 10½ to 15¾ ft. long by single outside vertical T-bar stiffeners, at the bottoms of which

were single transverse T-bar struts. Kneebraces were secured to the top chord stiffener brackets with single rivets, and to the transverse struts with four rivets. The $\frac{3}{4}$-in. lateral rods had flattened ends with single $\frac{3}{4}$-in. rivets through the bent lower ends of the kneebraces. U-shaped suspenders of $2 \times \frac{3}{8}$-in. iron, bent edgeways, were riveted to the web between the bottom flange angles, and the wooden floorbeams were passed through them and seated on the tops of webbed castings with semicircular grooves which engaged the bottoms of the suspenders. All T-bars were 4×3 in., and all rivets were $\frac{3}{4}$ in., except in the web splices. The span projected about 2 ft. beyond the face of each abutment, and had bearings on thin 8×12-in. plates riveted to the ends of the lower flanges, and resting on the top of the masonry without anchorbolts or bed plates.

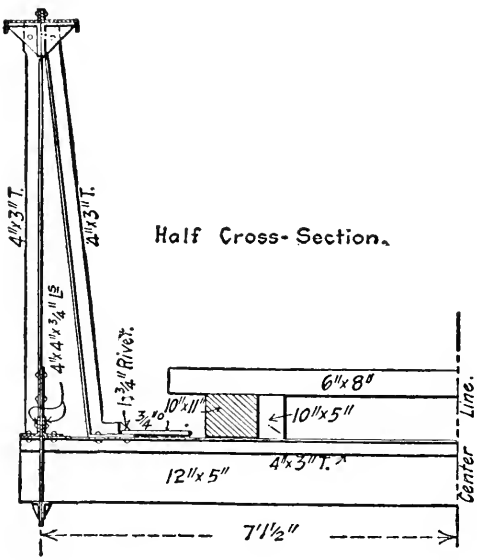

Suspended Floorbeam and Kneebraces.

Apache Cañon and Royal Gorge Bridges. — A single-track 105-ft. deck plate girder span of the New Mexico and Southern Pacific Railroad crosses the Apache Cañon, near Lamy, N. M., on a very sharp skew, so that the structure was said to bridge the cañon lengthwise. The end abutments were built out from perpendicular granite cliffs, and midway between them the center of the span is supported on a single trestle bent, which is peculiar in that one foot rests on the east side of the cañon, and the other foot rests on the west side. The trestle bent is virtually a two-hinged arch truss with a horizontal middle part and unequal end sections. All its connections are riveted except at the skewbacks which are pin-connected to pedestals set in recesses cut out of the granite walls of the canon. The plate girders are web-connected to the upper section of the arch truss so as to practically form a continuous girder from

abutment to abutment. The arch span is 40 ft. and the railroad track is about 18 ft. above high water.

Another single-track bridge of the same line is over the

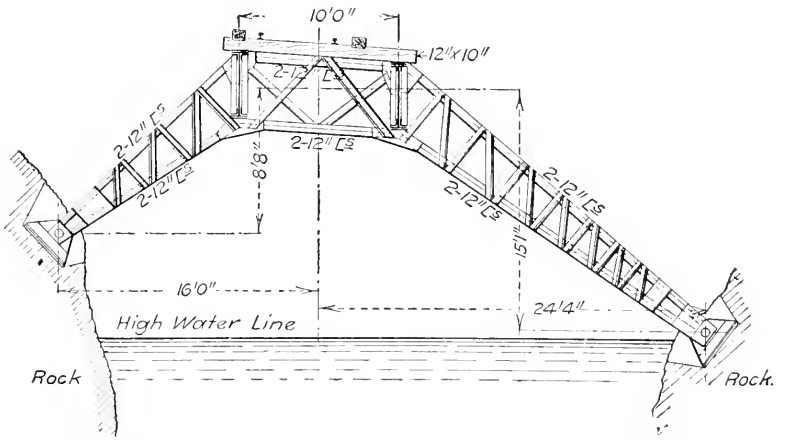

Cross-Section of Girders and Elevation of Arch Bent at Z-Z.

Arkansas River in the Royal Gorge of the Grand Cañon, near Cañon City, Col. Here for a distance of 273 ft, the single track is supported alongside the almost perpendicular rock walls

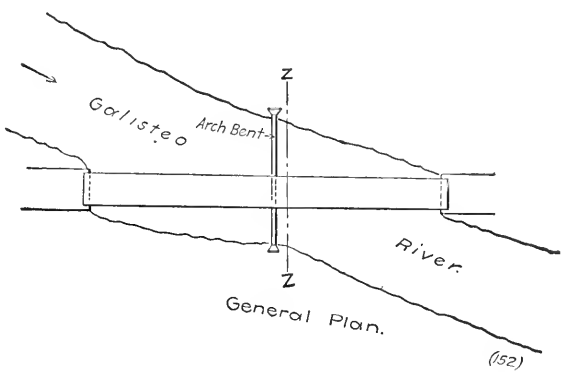

Half Cross-Sectional Elevation.

of the cañon and over the edge of the river, partly on three plate girder spans, two of which have a single girder each. At one end of the structure there is a span, one of whose plate girders is 88 ft. long, and is seated on ordinary abutments at both

ends. The other girder is 98½ ft. long, and is seated at one end on the abutment, and at the other end is supported by suspension from an overhead frame of inclined braces, like rafters, which are seated on opposite sides of the river. There is a duplicate overhead frame 91 ft. distant from which a very nar-

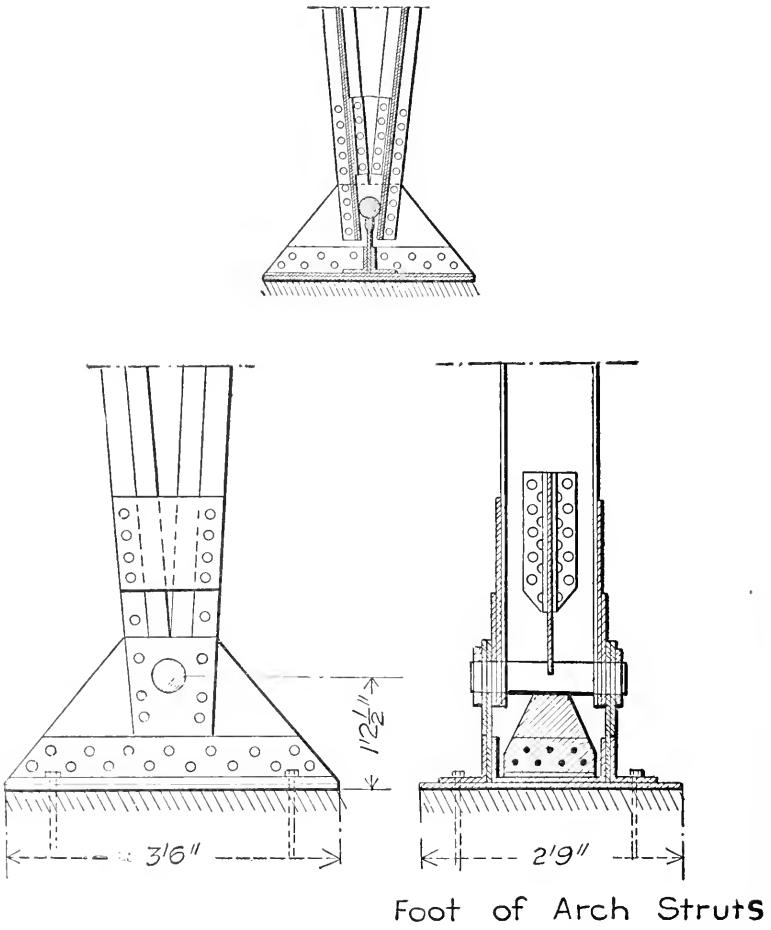

Bearing for Arch Bent with Longitudinal Center Support for Pin.

row shelf is terraced out of the solid granite of the cliff, and on it a longitudinal seat is anchored which supports the inner end of the ties whose outer ends are carried on the lower flanges of the single line of girders which are suspended over the river,

nearly parallel to its direction. At one end of the structure the ties are carried at one end on the suspended girder, and at the other end on an 88-ft. plate girder supported by abutments in the ordinary way. The suspended girders are web and flange spliced to form a continuous member across their points of support where they are pin-connected to a short pair of vertical eyebar links. The suspended girders are secured trans-

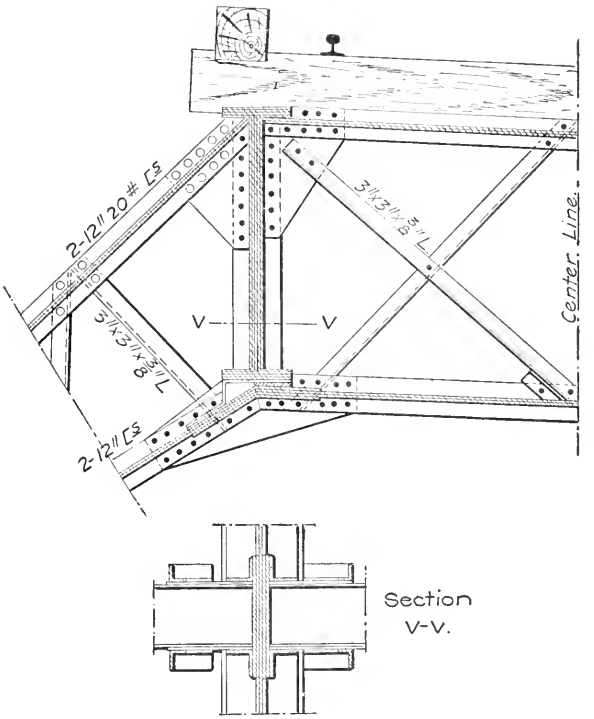

Detail of Arch Bent and Girder connection.

Spans Supported on Arch Bents.

versely by horizontal struts connected to kneebrace gusset plates, belted to the wall stringer, and anchored to the rock. Both of these bridges are described in Vol. XXV of the Transactions

Mad River Bridge. — The Waterbury & Connecticut Railroad crosses the Mad River at Meriden, Conn., on a single-track plate girder bridge, which makes a skew of nearly 29 degrees with the axis of the stream, and is 100 ft. long on the center

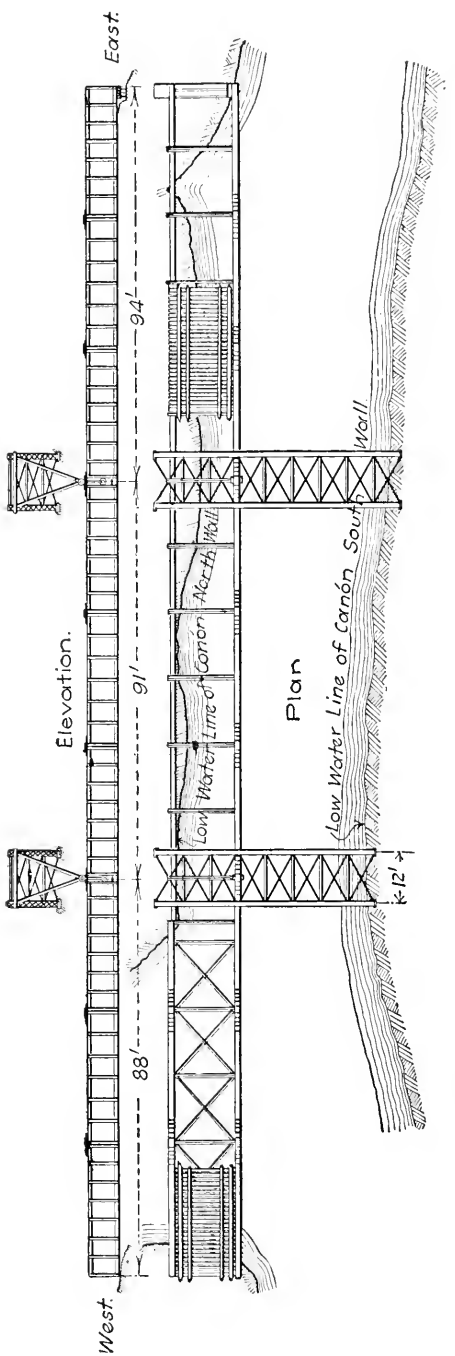

Suspended Spans.

line. The span is, however, reduced nearly one-half, without obstructing the waterway, by supporting the center of the bridge on an auxiliary plate girder span 48 ft. 9 in. long in the

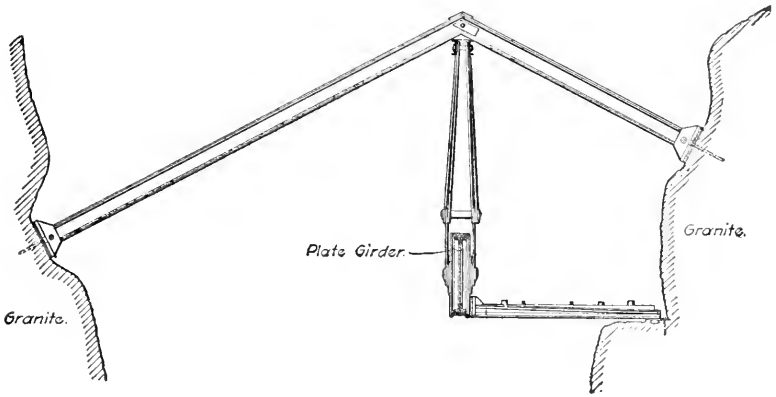

Cross-Section at Center.

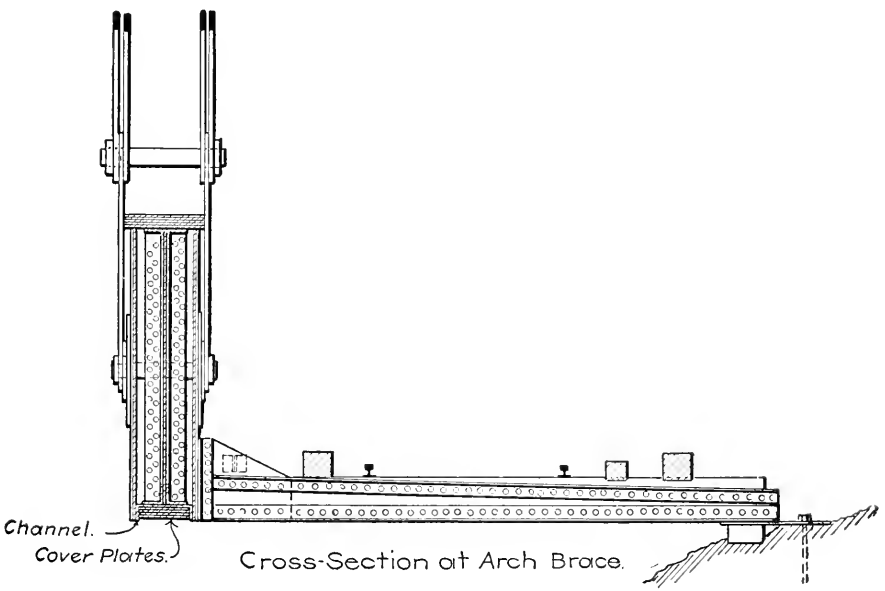

Detail of Girder Section and Floor.

clear, which crosses the river at right angles. This span consists of two 5-ft. plate girders about 3 ft. apart, with their webs connected by end and center diaphragms, and their top and bottom chord flanges latticed together. The track girders, 45½

and 63 ft. long, are about 6 ft. apart and receive the cross-ties on their top chords.

Kansas City, Memphis & Fort Scott Bridges. — Some plate girders on the Kansas City, Memphis & Fort Scott Railroad were designed with diagonal reinforcement angles like the members of a lattice girder, riveted to their webs to provide for heavy shear in the end panels without making the web plates excessively thick.

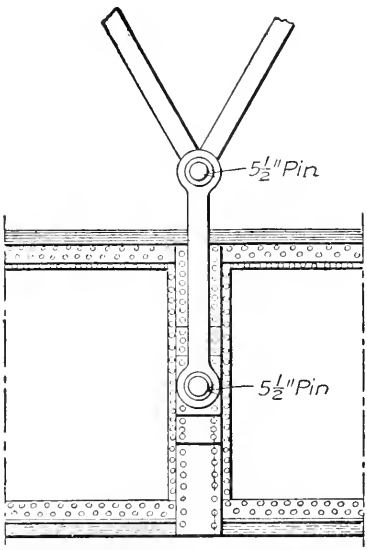

Side View at Arch Brace

Suspension of Continuous Spans.

Swannanoa River Bridge. — The driveway in the private estate of Mr. George Vanderbilt, at Biltmore, N.C., crosses the Swannanoa River on a plate girder bridge of 69 ft. clear span between abutments, which has been finished in concrete and cement plaster to have the effect of a flat stone arch. The two main through girders are 80 ft. long, 23¼ ft. apart, and 74 in. deep, with parallel top and bottom flanges made of pairs of 6 × 6 × $\frac{11}{16}$-in. angles. In the middle the flanges are horizontal for a length of about 10 ft., and then slope down 2 ft. 2 in. to each abutment. The girder is field-riveted in three sections, the middle one about 30 ft. long, having three panels with a web splice in each, the center panel being horizontal, and the end ones being slightly inclined to conform with slope to the abutments. The flanges each have a 13 × ½-in. cover plate 40 ft. long, which is shop-riveted to the flange angles for 25 ft. in the middle and field-riveted at the ends, where it extends a little past the 7½-ft. splice angles and laps over the end sections of the girder. At each end the girder has a bottom flange bearing 5 ft. long on a stiffened plate diaphragm 6 ft. high, in the plane of the web, which serves as a pedestal or extension of the abutment, and is knee-braced to the bottom flange at the first panel point by a pair of 3 × 3½-in. angles with bent ends.

The girders are connected together, just above their bottom

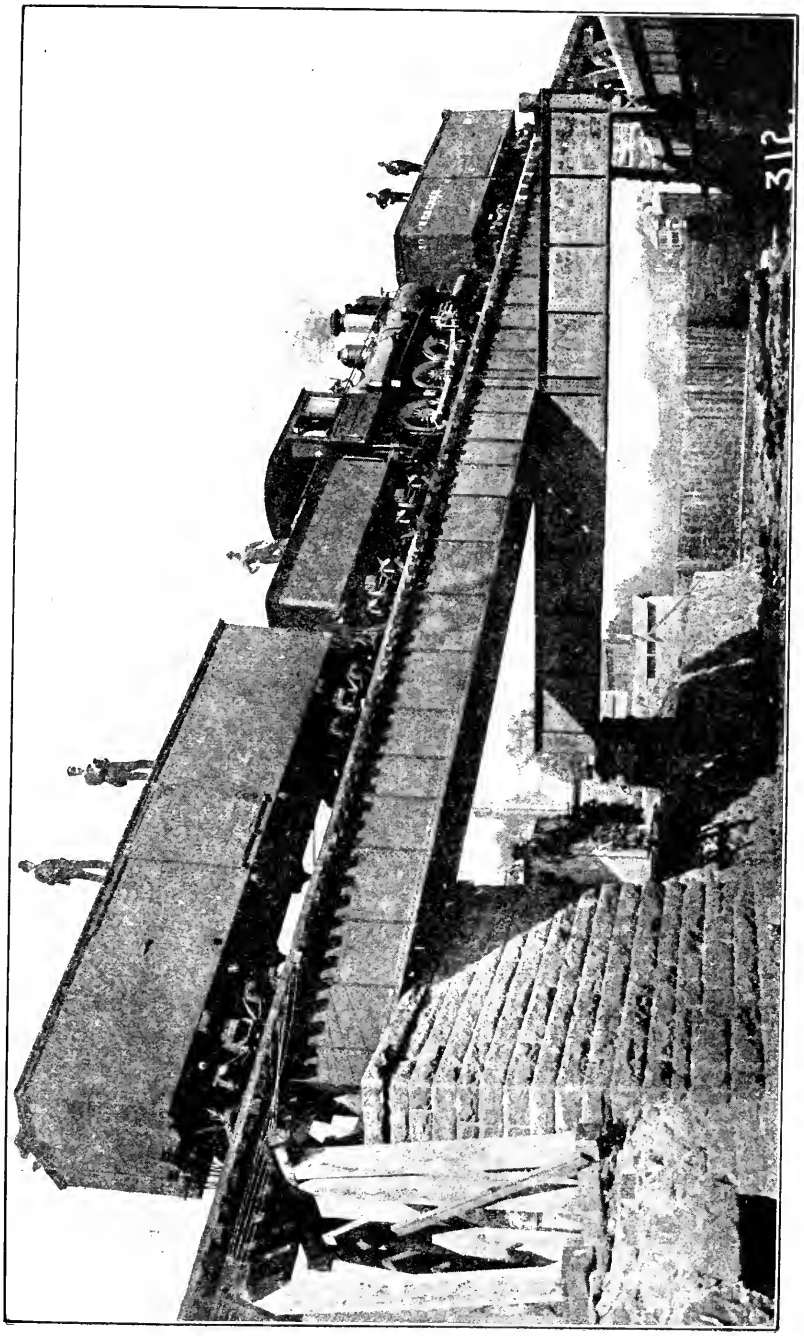

Skew Bridge with Transverse Center Girder Pier.

flanges, by plate girder floorbeams 2 ft. deep and about 10⅓ ft. apart. These carry three lines of web-connected 9-in. I-beam stringers, between which there are asphalted 8-in. red brick arches of 5¾-ft. span. On a concrete filling above the arches is a pavement of vitrified bricks laid edgewise, with a surface sloped so as to drain from the girders, and crowned 2½ ft. in 120 ft. by a longitudinal curve of 721 ft. radius. The bridge is proportioned for a live load of 90 lbs. per sq. ft. of floor surface, and the dead load per sq. ft. is calculated at 210 lbs., of which 76 lbs. is for the brick arches, 38 for the paving bricks, 53 for the filling, 13 for the steel floor, 20 for the main girders, and 10 lbs. for their plaster covering.

After the bridge was riveted up and thoroughly painted, 1½ × 1½-in. horizontal furring angles about 16 in. apart were bracketed out from both sides of the main girders and pedestals. A pair of angles, curved to a radius of 180 ft. at the center and 5½ ft. at the ends, were attached to the under side of each girder so as to form a false ellipse from abutment coping to coping and represent the intrados of the apparent arch. Heavy expanded metal was secured to the furring and curved over an angle above the top of the girder, and all its surface was plastered with Portland cement mortar about 1 in. thick, rough-cast finish. The intrados of the arch has a rise of 8 ft. from the top of the abutment coping, and is about 16 ft. above water level. The river banks are sloped at 45 degrees to the water's edge, and are planted with shrubs and vines, the latter carefully trained over the wing walls of rock-faced masonry and the parapet of the bridge.

Gaspee Street Multiple Track Bridge. — At the Providence, R.I., terminal of the New York, New Haven & Hartford Railroad, twelve tracks are carried over Gaspee Street on a solid floor skew through bridge with three spans, two of 11 ft. 7 in. over the sidewalks, and one of 49 ft. 11 in. over the road. The bridge is proportioned for a train load of 4000 lbs. per lin. ft. of each track and a concentrated load of 40,000 lbs. at any point, plus an impact allowance. An allowance of 2000 lbs. per lin. ft. of track was added to the dead load of the steelwork for the weight of ballast.

The bridge is supported on the masonry abutments parallel to the center line of the street and on two intermediate rows of 24 columns each, 10 ft. apart on the curb lines. These columns are 14 ft. high with H-shape cross-sections made with two flange

channels and a latticed web, and their tops are connected longitudinally by I-shape horizontal struts with kneebraces having curved flange angles. On the column caps are seated transverse box girders at right angles to the center line of the street and at an angle of 30 degrees with the directions of the tracks. They are 52 ft. long, 3 ft. wide, and 3½ ft. deep, with an inverted U-shape cross-section. The ½-in. web plates are 24 in. apart and are connected by eight vertical transverse diaphragm plates. The lower flanges are each made with an outside 6 × 6-in. and an inside 6 × 4-in. angle and four 12-in. cover plates. Each top flange is made with a single inside 6 × 6-in. angle to

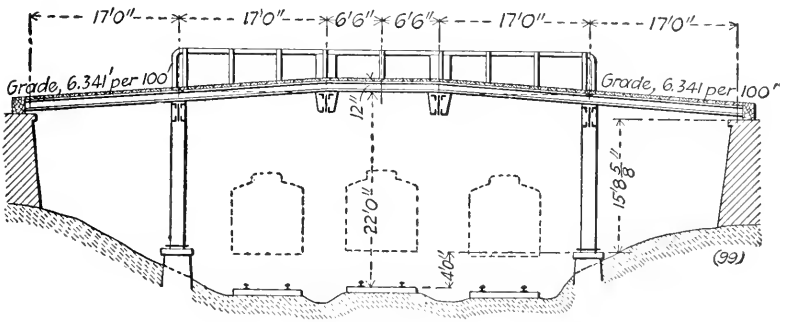

Side Elevation.

Overhead Span with Maximum Clearance between Floorbeams.

which are riveted two 25-in. outside and two 22-in. and one 12-in. inside cover reinforcement plates. The ends are notched to give seats over the column tops for the sidewalk girders of similar construction and smaller dimensions.

Continuous horizontal shelf angles are riveted to the sides of the web to support the ends of the floor troughs, parallel to the axis of the street and having their upper surfaces just below the top flanges of the girders. At the sides of the bridge, the floor is carried on oblique box girders 8½ ft. deep and 79 ft. long, which weigh about 43,000 lbs. each, and are similar to the 35,000-lb. intermediate transverse girders. The patent floor troughs 10 in. deep and 21 in. wide, are made with inclined side plates riveted to special rolled top and bottom channel-like sections. They weigh 34.7 lbs. per sq. ft., and were shop-riveted in strips about 12 ft. long.

The Wellsville Bridge. — Madison Street at Wellsville, N. Y., is carried over three tracks of the Erie Railway by a 47-ft.

through plate girder span and two 17-ft. approach docks. As the street was elevated on both sides to cross the bridge, the grade was kept as low as possible, and a clearance of 22 ft. headway over the base of the rail was secured with the floor surface only 23 ft. above the base of rail. The four vertical columns which support the superstructure are spaced 47 ft. apart, transversely, so as to clear the outside tracks and leave short side spans between them and the abutment walls, where the floor is supported on longitudinal 9-in. beams with a grade of 6.35 per cent, which is continued to the middle panel of the main span.

The main span has two 54-in. plate girders 19 ft. apart, and four floorbeams 24 ft. deep, which divide it into three panels.

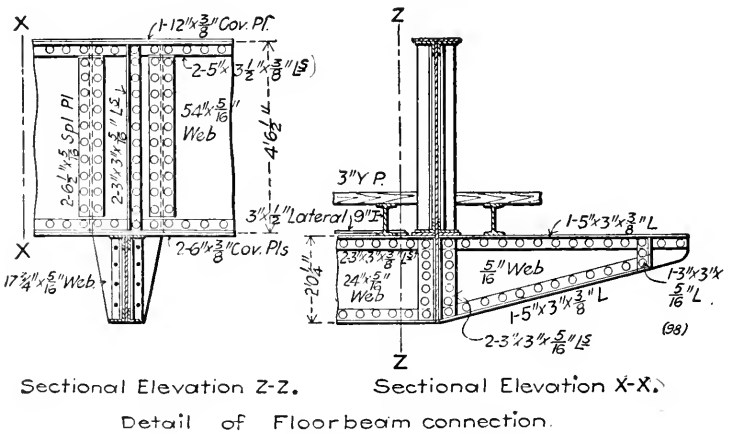

Suspended Floorbeam and Special Web Plate Section.

The center panel length is about equal to the distance between centers of the spaces between the tracks, so that the floorbeams there come in vertical planes between the clearances required for the cars on the middle and side tracks. By this arrangement the floorbeams occupy waste spaces between the tracks and can project wholly below the line of clearance for the center of the tracks which determined the height of the lower side of the main girders and stringers. This arrangement has been adopted in other cases where the headway is limited for overhead bridges, and only requires that the floorbeams shall come in the middle of the spaces between tracks, an indefinite number of which may be crossed. In this case the upper flanges of the intermediate floorbeams are in the same horizontal plane as, and are riveted

to, the lower flanges of the main girders. They are suspended from the main girders by narrow sections of their webs which project below the lower chord far enough to rivet to their end stiffener angles. In order to permit these plates to project below the girder flanges, the reinforcements on the latter are made of two plates, 6 in. wide and ½ in. apart, one riveted with two rows of rivets to each flange angle instead of a single plate 12 in. wide riveted over both angles. The end floorbeams are set a few inches lower than the intermediate ones, and are web-connected to the trestle columns. The roadway is floored with 3 × 12-in. yellow pine transverse planks laid on nine lines of longitudinal stringers 9 in. deep, which are level in the middle panel and graded in the other panels. Plate-girder brackets made with a solid web and single top and bottom chord angles are connected the same as the corresponding floorbeams, and carry the 5-ft. cantilever sidewalks on both sides of the bridge. The trestle columns are made of pairs of channels latticed, and are connected by stiff transverse sway-brace diagonals and lower struts.

All floor lateral diagonals are single 3 × ½-in. flat bars. The upper corners of the main girders are rounded, but this does not involve bending long pieces, as the top chord angles are cut off tangent to the curves and carefully fitted to the vertical end stiffener angles of the same size, which are bent to the required radius. The cover plate over the end vertical curved angles is riveted down over the rounded corner and continued a few inches beyond it to butt against the end of the first flange reinforcement plate, the joint being protected by a cover splice plate. Another cover splice plate is riveted over the lower end of the girder and the side of the column.

Wooden Plate Girders. — Several short deck spans carrying city highways in St. Paul have been built with plate girders composed entirely of straight white pine boards fastened together with wire nails. The web is composed of solid layers of diagonal boards inclined in opposite directions at angles of 45 degrees with the vertical with two nails through each intersection. In long spans the diagonal pieces may be separated to leave open spaces between them like those in the familiar Howe truss which closely resembles this construction. The flanges are made by reinforcing the upper and lower edges of the web with successive layers of side boards of the required dimensions and covering them with horizontal boards, as indicated in the sketch. Joints should be broken and spliced as in steel construction.

Tervuerin, Portal Span. — A single-track railroad bridge in the park at Tervuerin, Belgium, has a span of 103.3 ft. and was proportioned for a load of 31,584 lbs. per lin. ft. It has two pin-bearing main plate girders 11.64 ft. deep and 9.64 ft. apart with angle iron sway braces bottom lateral diagonals. The deck floor has web-connected floorbeams and girders at top chord level, and for purposes of comparison it was built with the same general dimensions as a latticed girder already constructed. The main girders were of peculiar construction, and resembled plate girders with large open panels of web stiffened with flange angles, as shown in the isometric view and called Portal Construction. They were designed with the avowed intention of securing greater solidity, strength, and economy than in a lattice girder span of the same dimensions, and were tested to demonstrate these claims, to investigate the hypothesis of the work of flexure in lattice girders, and for comparison with other European experiments.

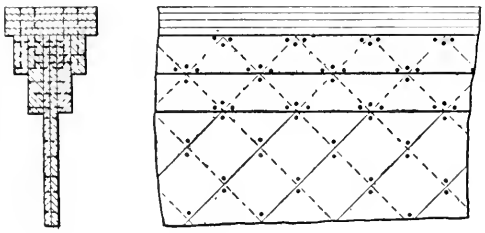

Flange and Web Construction.

It was assumed that the diagonal members of loaded lattice girders are subjected to deflections, occasioning fatigue, which augment the direct stresses but cannot be calculated, and that only the mean work of resistance can be calculated. From the experiments by M. Dupuy, on the Cosny bridge in 1897, it was demonstrated, 1, that the axis of support must coincide with the neutral axis of the vertical end post; 2, the neutral axis of members connected together at one point must converge to the same point; 3, the members must be arranged so that the stresses shall be as nearly as possible along their neutral axes; 4, a type must be adopted approaching as nearly as possible to a plate girder with a section symmetrical about the center of gravity and with openings symmetrical around the neutra laxis; 5, the web members must not be placed more than 13.93 ft. apart or allowed to deflect unnecessarily; 6, the vertical members must be made very rigid and not subjected to more than two thirds the work allowed for the other members, and should be reinforced at the base to double the area allowed for the horizontal section; 7, that the vertical members must be connected

to the chord webs and to the cross-strut webs with gusset plates thick enough to resist the horizontal shear; and, 8, that there should be an excess of web members, approaching a continuous web.

All but the last requirement are fulfilled by the portal girders where the vertical web members are retained and the diagonals omitted. The Tervuerin bridge weighed complete 149,953 lbs. The maximum work under a test load of 16,333 lbs. for each vertical was calculated at 11,337 lbs. per sq. in. for both principal and secondary fatigue. The bridge deflected 0.531 in. under a dead load only, and when half the span, from the abutment to center, was loaded with a uniformly distributed load of 167,550 lbs., a deflection of 1 in. was produced in 48 hours. When an equal load was applied to the remaining half of the bridge, the deflection was increased to 1.88 in. immediately and to 2.14 in. in 14 days.

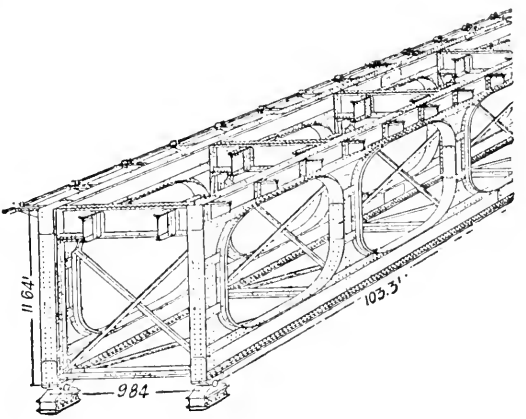

Experimental Portal Girder Spans.

Plate Girder Arch Span.

In designing short-span highway bridges a few years ago for the park road system, Cleveland, O., special care was taken to diversify their appearance, and give them a more graceful and attractive form than is usually the case with plate girder spans whose rectangular outlines are generally noticeably utilitarian. In some cases the masonry abutments and wing walls were made unnecessarily massive so as to be more conspicuous than the plate girders and permit artistic treatment. In one of the longest spans the effect of an elliptical arch is produced with plate girders having a horizontal top flange and curved bottom flanges. As they have pin bearings at the center and abutments they really do constitute three-hinged arch ribs, but the detailing and

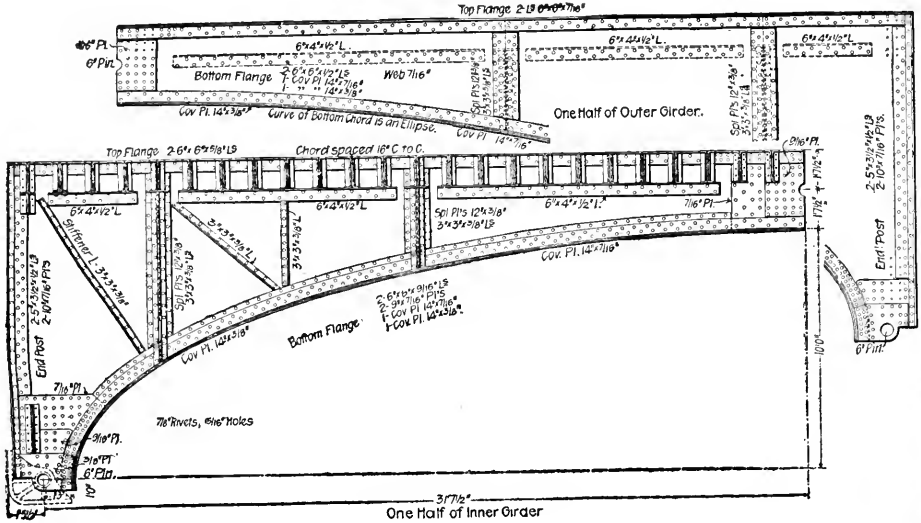

Plate Girder Arch in Park.

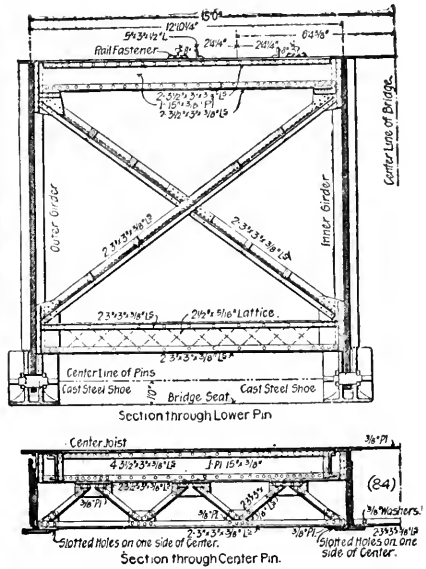

Transom Bracing and Floor Construction.

construction are so obviously characteristic of plate girder practice that it is illustrated here rather than in the volume of Types and Details which deals solely with arches.

The span is about 66 ft. long, 31 ft. wide, and 11 ft. deep over all, and has four lines of plate girder arch ribs, each made with two semi-arch sections. The two inner ribs are not connected together except by a horizontal flat floor plate riveted to the top flanges. The longitudinal panels between the inner and outer ribs are braced transversely by horizontal top and bottom struts and X-braces in the end vertical plane and by a center transverse strut. They are also connected by plate girder floor-beams 15 in. deep, with their top flanges flush with those of the girders and seated on continuous shelf angles riveted to one side of each main girder web.

The inner girders are more heavily loaded than the outer ones on account of the position of the two street car tracks, and their webs are reinforced at the haunches by inclined angles riveted to them and resembling the diagonal members of ordinary truss spans. The crown hinge pin has half-hole bearings, and the skewback hinge pins have full-hole bearings in cast steel pedestals bedded on their vertical and horizontal sides in the concrete abutments. The girder webs are notched at the skewback pins to clear the stiffening webs of the pedestals.

PART VI

DISCUSSION OF PLATE GIRDERS BY EMINENT DESIGNERS

The foregoing pages have been strictly limited to the descriptions of plate girders which have been actually built, statements of facts, and some accounts of the important conditions, requirements, and general methods of calculation, construction, and erection. Analysis, criticism, and personal opinion have been eliminated to give a comprehensive record of past and present construction.

The designs and details illustrated substantially cover typical, standard, and special work in the United States, and embody advanced theoretical and mathematical work and mechanical construction and a consideration of practical requirements. For the highest usefulness these should be studied with the best specifications, reports of maintenance, and the mathematics of stresses, as the latter are developed in standard text-books and professional papers.

Such consideration is beyond the limits and scope of this volume, but the author is privileged to present what amounts to a résumé of most features of such investigations which has been prepared especially for this book by some of the ablest and most experienced bridge engineers, builders, and teachers that are specialists in this work. They have embodied in concise form what each considers essentials of plate girder construction. Together their discussions present an epitome of the subject from the standpoint of the analyst and mathematician, the designing engineer, the consulting engineer, the railroad engineer, the municipal engineer, and the bridge manufacturer. These monographs cover the field broadly and practically; they are advanced and liberal, yet conservative, and confined strictly to actual conditions. In a large measure they outline the personal practice of the writers, and give conclusions of great value all around the horizon. They greatly enhance the value of the preceding pages, and form much the most valuable portion of this volume. Although it is needless to commend them to the technical

reader, the writer wishes to most earnestly express his appreciation for the high value of these authoritative discussions, not less than for the dignity they add to the volume, and to severally thank the writers for the work involved in their preparation, and the personal friendship by which alone they were inspired.

CHAPTER XXXII

COMPUTATIONS REQUIRED IN THE DESIGN OF PLATE GIRDERS

By Henry S. Jacoby, C.E., Professor of Bridge Engineering and Graphics, Cornell University

The load for which a plate girder is to be designed is usually given in the specifications. In railroad bridges the specified load is not only equal to that to be supported when the structure goes into service, but provides for the probable increase in the live load during the estimated life of the bridge. A similar allowance is also required in highway bridges subject to electric car traffic, and is advisable in other cases in or near cities where the weight of heavy pieces of machinery hauled through the streets is likely to increase materially. Even in building construction careful consideration should be given to the question of specifying greater loads for the girders in some parts of buildings on account of probable changes in their use.

Many bridge departments of railroad companies and of municipalities provide their own specifications, while others use those prepared by prominent consulting engineers, and some of which are published.

The computation of stresses in a plate girder includes the determination of the bending moments and vertical shears in one-half of the span. By computing the maximum moments at intervals of about one-tenth of the span, their values may be laid off as ordinates and a curve drawn through their extremities in order to find the moments at any other section with sufficient precision. For a uniformly distributed load on a simple span this curve is a parabola, which may be drawn after the bending moment represented by its middle ordinate is computed. In the case of a girder, where the load is applied to it only at fixed points by means of floorbeams, the curve of moments becomes a polygon whose vertices lie in the same vertical sections as the floorbeams. In such cases only that part of the dead load which equals the weight of the girder itself may be regarded as uniformly distributed.

In a similar manner the curve of vertical shears may be drawn. For a uniform dead load the curve becomes a straight line, which in the case of a simple span intersects the axis at the middle of the span. For a uniform live load, the curve of maximum shears is a parabola whose vertex is at one end of the span, the curve being tangent to the horizontal axis at the same point. The effect of a concentrated dead load is to make a step in the curve of shears. The methods of finding the positions of a series of concentrated axle loads which cause the greatest moments and shears at any section of a plate girder of simple span are described in Arts. 42 and 43 of Merriman and Jacoby's Text-Book on Roofs and Bridges, Part II, or in other books on bridge stresses.

The depths of plate girders range from about one-eighth to one-fourteenth of the span, the mean for those of recent design on railroads being between one-tenth and one-eleventh of the span. The depth is frequently determined by local conditions, but if not, it should be made equal to, or a little less than, that value which makes the weight of the flanges and their splices, if any, equal to the weight of the web including its splices and stiffeners.

The web plate must provide sufficient net section to resist the maximum vertical shear without exceeding the safe working stress given in the specifications. In a simple girder supported at the end by means of connecting or hitch angles, the required net section is located at the inner line of rivets through the wide filler plates usually placed under the end angles so as to avoid crimping them over the flange angles. When the girder is supported on a pedestal or other bearing under the lower flange, the net section is that along the rivet line of the inner pair of end stiffeners. The web plate is usually made of the same thickness throughout the span, except in very long girders under heavy loads, when one change in thickness is made, and in very rare instances, two changes.

By mechanics it is shown that the web plate helps the flanges to resist the bending moment at any section to the same extent as though about one-sixth of its net sectional area were concentrated at the center of gravity of each flange. What percentage of the gross web area this may equal depends upon the pitch of the rivets in the web plate at or near the section of the girder under consideration, the rivets referred to being located either in a stiffener or in the outer row of a web

splice. For $\frac{7}{8}$-in. rivets and a uniform pitch of three inches, the one-sixth of net section becomes one-ninth of the gross section, while for a pitch of 4 inches it becomes one-eighth of the gross section.

The effective depth of a plate girder is the distance between the centers of gravity of the upper and lower flanges. The total flange stress equals the bending moment divided by the effective depth. Especial care must be taken to express the bending moment in pound-inches when the depth is expressed in inches. Since the effective depth is not known precisely until the flange is designed, an approximate value is used in obtaining a preliminary value of the flange area. The lower flange is usually designed to furnish the necessary net area, and then the upper flange is made of the same gross section.

The specifications indicate certain relations between the distance of the outer row of rivets from the edge of a plate, thus limiting the difference in width between the angles and the cover plates. They also state how close to the section a rivet hole may be without requiring its transverse area to be deducted from the flange area. Practice in this respect is often on the side of danger when the specification is not very explicit on this point. Sometimes no deduction is made for rivet holes located as close as one inch from the cross-section passing through the largest number of rivet holes, while in other cases the rivets in one leg of a 6-in. flange angle are made to stagger with both rows in the other leg in order to reduce the deduction for rivet holes.

When the span exceeds that for which a single web plate can be procured, one or more splices are required. These should be designed to develop the full strength of the net section of the web plate along the outer row of rivets in the vertical splice plates. This is preferably done by using horizontal splice plates over the vertical legs of the flange angles, or adjacent to them, to supplement the vertical splice plates. Taking the strength of the outermost rivet as its full bearing value on the web plate, that of any other rivet in the splice is proportional to its distance from the neutral surface. The sum of the moments of these bearing values of all the rivets in the splice about the neutral axis may thus be computed. In a similar manner the reduction in strength of the web plate due to any rivet hole in the outer vertical row may be expressed in terms of the reduction due to an imaginary one located at the outer fiber whose

value involves the allowable tensile strength of the material in the web plate. On multiplying all of these values by their respective distances from the neutral axis and subtracting the sum from the resisting moment of the solid-web plate, the resisting moment of net section may be obtained. By properly arranging the rivets in the splice, these two moments can be made practically equal.

The net tensile strength of the horizontal splice plates must equal the combined bearing value against the web plate of the splice rivets which pass through them. It should be observed, however, that since on the side of the joint toward the nearer support a certain number of flange rivets are required to transmit the increment of flange stress from the web plate to the flange angles, the splice plates, if placed on top of the vertical legs of the flange angles, must be extended far enough on that side to engage the necessary number of splice rivets as extras, the pitch being reduced for this purpose.

The intermediate web stiffeners are to be given enough section to transmit the heaviest concentrated load to the web plate. In order that the upper flange of a deck girder may be properly supported, the outstanding leg of the stiffener should extend nearly to the edge of the flange angle. This arrangement generally insures an excess in sectional area.

The duty of the end stiffeners is to transfer the vertical shear at the end of the span to the support of the girder. From two to four pairs of angles are required, depending upon the magnitude of the shear. The angles are to have enough sectional area to resist a compression equal to the total shear, while the number of rivets is governed by their bearing value in the web plate, provided this is less than their value in double shear. The angles should really have an excess of sectional area since they have the additional duty of stiffening the web plate, but no exact computation can be made for this. Sometimes their total area is obtained by treating the pairs of end stiffeners as columns supporting a load equal to the vertical shear.

When a girder is supported at the end by a pair of angles riveted to the web of another girder or to a column, the number of rivets in both the connecting angles and the extended filler plates must provide sufficient bearing value to carry the shear out of the web plate, while the number of rivets in the angles alone must not be less than that needed to transfer the entire vertical shear into the angles. When the value of the rivets in

double shear is less than either their bearing in the two angles, or in the two filler plates, their value in double shear governs the strength of the rivets in carrying the shear into the angles. The difference between these two numbers is sometimes so small that several extra rivets must be put into the fillers so as not to exceed the maximum allowable pitch or to fit well with the rivets in the adjacent row.

The first cover plate is generally made the full length of the girder. The points where the second cover plate may end theoretically are found by locating each ordinate in the diagram of maximum moments whose value equals the resisting moment of that part of the flange which is inside of the second cover plate, due allowance being made for the equivalent flange area of the web plate. The plate should be lengthened from 9 to 12 in. beyond each point, so that it may engage several rivets to develop some stress at the given section. The lengths of the other plates are found in the same manner.

The pitch of the rivets that connect the flange angles to the web plate is determined by dividing the bearing value of one rivet against the web plate by the maximum increment of flange stress per linear inch, provided no vertical loads are supported directly by the flange itself. The total increment of flange stress at any section equals the maximum vertical shear in that section divided by the effective depth of the girder in the same section, but since the web resists a part of the bending moment, this quotient must be multiplied by the ratio of the area of the flange alone to the sum of the equivalent flange area of the web and that of the flange section.

In the upper flange of a deck girder where the rivets have the additional duty of resisting the vertical loads supported by the flange, the vertical load per linear inch is to be combined with the corresponding horizontal increment of the flange stress and the resultant then used to get the rivet pitch.

Where side plates are used under the flange angles, the rivets passing through the side plates and web are as effective in transmitting stress from the web plate to the flange as those which also pass through the flange angles, and hence may all be counted in this computation. In this case the number of rivets required in the angles is determined by their value in double shear provided it is less than their bearing either in the two angles or in the combined side plates.

Since practical considerations require the pitch of the rivets in

one row of the horizontal leg of the flange angle to stagger with those in the adjacent row of those in the vertical leg, it is not necessary to compute the rivet pitch in the cover plates. It is sometimes customary to reduce the rivet pitch at the end of each cover plate outside of the first for a distance sufficient to develop the full strength of the plate.

It is desirable to reduce the number of flange splices to a minimum. A splice should always be arranged to act in as direct a manner as possible. A flange angle is spliced by means of another angle of the same sectional area placed on its face and containing enough rivets on each side of the joint to develop its full strength. If this makes the splice angle so long as to interfere with the stiffeners, a flat may be placed against the vertical leg of the opposite flange angle, reducing the area of the splice angle accordingly. By this arrangement one-half of the connecting rivets are in double shear, and then their bearing on the angle to be spliced will govern, provided it be less than their value in double shear.

The splices in the cover plates are preferably so arranged that a joint in one is spliced by extending the next outer plate a short distance so as to serve as a splice plate. Usually the outside plate can be made continuous, but if not, an extra splice plate is needed for its joint.

The lateral diagonals can usually be designed by the specified column formula so as to consist of a single angle, although in long spans two angles may be required near the ends. Since the neutral axis of the angle does not coincide with the axis of the end connections, a bending moment is developed, and hence the combined stress in the outer fiber should not exceed the allowable stress. Formulas for this purpose may be found in standard works on mechanics. The connecting rivets are also affected by the eccentricity. The total shear in any rivet is the resultant of its longitudinal shear due to the direct stress in the lateral, and of its radial shear due to the moment of rotation of this stress about the center of gravity of all the rivets in the connection. As these radial shears are directly proportional to their distances from this center, they may all be expressed in terms of the shear in the remotest rivet, whose value is then found by equating the sum of the moments of all the radial shears to the moment of rotation of the direct stress in the angle.

The recent increase in live load has materially increased the

lateral vibration in bridges, and their behavior indicates that in many cases the lateral systems lack the necessary stiffness. Greater strength and stiffness may be secured either by treating the nominal wind stresses as due to live load, and designing the laterals for alternate stresses, or by materially increasing the specification for wind load.

The transverse bracing or cross-frames at the end of a deck plate girder must transfer the horizontal reaction of the upper lateral system to the support, but it is frequently found that this requirement is satisfied by smaller angles than the minimum sizes allowed, or than those adopted in practice to secure rigidity. As it is difficult to estimate the exact duty of this bracing, it is best to be governed by the results of experience. The same remark applies to the intermediate cross-frames, whose principal duty is to stiffen the girders and reduce their vibration.

In designing the expansion bearings, which at present are usually made in the form of hinged bolsters so as to secure a uniform distribution of the load upon the friction rollers and upon the masonry, the pins must be given sufficient bearing on each of the longitudinal webs, and ample strength as a beam when the webs of the upper and lower shoes are spaced unequally. The longitudinal webs are computed as double cantilevers, those in the upper shoe to carry the load from the end stiffeners and bearing plate to the pin, and those in the lower shoe to transfer the load from the pin to the bearing plate on top of the rollers. The best formulas for the strength of rollers make the allowable pressure per linear inch to vary directly as the diameter. When the allowable pressure on the masonry requires more area than that covered by the rollers, the load is distributed by placing rails or I-beams between the rollers and the bed plate. Their size is so chosen that the stress in the outer fibers of their cantilever ends is kept within the allowable limit. In large bolsters it is necessary to have transverse webs or ribs which are designed as beams and cantilevers to distribute the load transversely over the rollers.

Numerical examples illustrating the design of the various details of a plate girder bridge in accordance with modern specifications and heavy loading for railroad structures, may be found in Chapter VII of a Text-Book on Roofs and Bridges, Part III, by Merriman and Jacoby.

CHAPTER XXXIII

GENERAL DESIGN AND IMPORTANT CONSIDERATIONS AND RULES FOR PROPORTIONING AND DETAILING PLATE GIRDER SPANS

By Dr. J. A. L. Waddell, C.E., Bridge Engineer, Formerly Professor of Civil Engineering at University of Tokio, Japan

Although plate girders are of necessity as unscientific structures as a bridge specialist ever has to design, they are, in my opinion, the most satisfactory type of construction possible for short spans. This conclusion has been reached by personal examination of many miles of old bridges. An overload that would cripple a truss bridge would have no apparent effect on a plate girder span, because in the latter, owing to a multiplicity of rivets connecting the web to the flanges, there is no concentration of stress at apices such as there is in truss bridges, consequently there is less tendency to overwork the rivets. If two or three rivets be loose in any detail of a truss bridge, the remaining rivets of the group are liable to be seriously overworked; while several consecutive rivets may be loose in a plate girder bridge without causing any material injury.

Much has been written concerning the theory of stress distribution on webs of plate girders, and the proper location of the stiffeners, but all such theories are upset by the fact that many plate girders having stiffeners only over the supports have carried heavy loads for years without showing any sign of buckling or overstress. This is no reason, though, for the omission of stiffeners in plate girder designing; for, in addition to their theoretical functions, they are useful in supporting the top flanges in deck spans, and they keep the web from injury by bending during both manufacture and transportation.

Exactly how the flange stresses in plate girders distribute themselves over the metal, no one can say; but there is probably an approximation to uniformity, obtained possibly by overstrains in certain places; nevertheless, experience shows that, if an ample number of rivets be used for connecting all the component parts of the girder, such local overstrains will do no harm.

In respect to the relative economics of plate girder spans and truss spans, it may be stated that in deck bridges, when the floor consists of timber only, plate girders are more economical than trusses up to the practicable limit of transporting the former without field-splicing. The latter expedient is permissible only in cases of bridges to be shipped to foreign countries, and is to be avoided if possible, even then, as it is extremely difficult to obtain a first-class job of field-riveting when making the splices, although the use of pneumatic riveters reduces greatly this objection.

The accepted rule that the perpendicular distance between webs of deck plate girders must not exceed one-tenth of the span length for modern live loads limits the span length for single-track structures to about 100 ft., because a greater length of ties than ten feet between centers of bearings would involve the adoption of heavier timber than is easily and economically procurable. But for double-track structures the use of four lines of girders spaced equidistant permits the bracing together of two pairs of girders by vertical frames that have no diagonals, and the running of both the upper lateral system and the lower lateral system from outer girder to outer girder. As wooden ties of ordinary dimensions can be used under such circumstances, the limiting length of the girders will be determined by the ability of the railroads to transport them. It is not likely that girders exceeding 120 ft. in length can be carried on cars advantageously; and, moreover, a riveted truss span of that length having either four or five panels makes a very satisfactory structure.

In the case of half-through plate girder spans or deck plate girder spans with steel stringers and floorbeams, it will be found that these are more expensive by three or four dollars per lin. ft. than the corresponding riveted through or deck truss spans for a length of 100 ft., and that for greater lengths the difference of cost is still more. As it hardly seems advisable to build riveted truss spans shorter than 100 ft., it is well to adopt this length as the superior limit for half-through plate girders and deck plate girders with steel floor systems.

Concerning the economical depths for plate girder spans, I beg to quote as follows, from p. 33 of De Pontibus. "If for ordinary cases, in designing plate girders, one will adopt such a depth as will make the total weight of the web with its splice plates and stiffening angles about equal to the weight of the

flanges, he will obtain an economically designed girder, and a deep and stiff one. For long spans, however, this arrangement would make the girders so deep as to become clumsy and expensive to handle; consequently, when a span exceeds, say, 40 ft., the amount of metal in the flanges should be a little greater than that in the web; and the more the span exceeds 40 ft., the greater should be the relative amount of metal in the flanges."

Splices in webs of plate girders should be as few and far between as the limiting sizes of plates furnished by the rolling mills will permit. Even if the pound price for very long plates be greater than that for those of ordinary length, it will generally pay to adopt the former, because each splice involves an increase in both weight of metal and cost of shopwork; besides, the weakest places in plate girders are likely to be where the metal is spliced.

In all ordinary plate girder work, the splicing of flanges should be barred, for nowadays it is practicable to obtain angles and narrow plates of immense length; but occasionally it is found necessary to adopt flange splices. These should be full and shingled, and the figured strength of the splice should, as a matter of precaution, be made 25 per cent greater than that of the section spliced.

In respect to the detailing of plate girders, I beg to quote, with slight modifications, as follows from pp. 166–169 of De Pontibus. "Plate girders shall have preferably a depth not less than one-tenth of the span. All plate girders, whenever it is practicable, shall be built without splices in the web, and, when such become necessary, the smallest possible number of same shall be adopted. The splice plates and rivets for the splices shall be such as to develop in every respect the full strength of the net section of the web, the main splice plates extending from flange to flange, and having at least two rows of rivets on each side of the joint. In addition to these, each flange shall be spliced by two cover plates outside of the vertical legs of the flange angles. These vertical plates must be of such section and length as to develop by the connecting rivets at least 25 per cent more stress than the area of the web figured as flange section.

"Splices in flange plates and angles must always be avoided when sufficiently long plates and angles are procurable, which will always be the case, unless the span be abnormally long.

Where flange splices are unavoidable, they must be so located that no two pieces of either the flange or the web shall be spliced within two feet of each other, and so that no flange splice shall occur at any point where there is not an excess of sectional area above the theoretical requirements. Every non-continuous flange piece shall be fully spliced so that the splicing plates and rivets shall have a calculated strength at least 25 per cent greater than that of the section spliced. Field-splicing of plate girders will never be allowed for fixed spans, except in structures for foreign countries.

"At least one-half of every flange section must consist of angles, or else the heaviest sections of the latter must be used; and the number of cover plates must be made as small as practicable, in no case exceeding three per flange. The lengths of these cover plates must be such as to make them project at each end not less than 9 in. beyond the point determined by the calculations for the requisite resistance to bending.

"Where two or three cover plates per flange are used, they shall be of equal thickness, or shall decrease in thickness outward from the angles. The cover plates shall not extend more than 4 in., or eight times the thickness of the outer plate, beyond the outer line of rivets. With cover plates more than 14 in. wide, four lines of rivets shall be used.

"The compression flanges of plate girders shall be made of the same gross section as the tension flanges; and they shall be so stiffened laterally that the unsupported length shall never exceed twelve times the width of flange.

"In deck spans there are to be bracing frames at the ends and at intermediate points not more than 15 ft. apart; and there is to be an effective system of diagonal bracing of angles between the top flanges of the contiguous girders for each track.

"In half-through spans the girders are to be divided up into panels generally not exceeding 15 ft. in length. If a steel floor system be used, there are to be brackets of web plates and angles at the ends of the cross-girders extending to the top flanges of the longitudinal girders, so as to stay the latter effectively. The type of through plate girder span having wooden ties resting on shelf angles riveted to the webs of girders, should be avoided by using solid steel floors wherever it is essential to secure very shallow floors. Half-through plate girder spans are to have a rigid, double intersection lower lateral system of angles riveted together by plates and angles at their intersec-

tions and to the bottom flanges of the steel stringers, if the latter be employed.

"Web stiffeners shall be placed at the ends of plate girder spans, also at all points of concentrated loading, and at intermediate points at distances not exceeding either the depth of the girder or 5 ft., except in the case of shallow girders where the shear, including impact, does not exceed 5000 lbs. per sq. in. of web section. Under such circumstances the spacing of intermediate stiffeners may be made as great as $3\frac{1}{2}$ ft.

"All stiffeners must bear tightly at top and bottom against the flange angles. Under end stiffeners there must be fillers flush with the flange angles, but intermediate stiffeners shall, preferably, be crimped. All stiffeners must be in pairs.

"End stiffening angles shall in no case be less than $3\frac{1}{2} \times 3\frac{1}{2} \times \frac{3}{8}$ in. net, and must have sufficient area to carry the entire end-shear, including impact, with the specified intensity of working-stress, no reliance being placed on the fillers.

"The sections of intermediate stiffening angles shall not be less than those given in the following table:

Length of Girder.	Dimensions of Angles.
Up to 50 ft.	$3\frac{1}{2} \times 3\frac{1}{2} \times \frac{3}{8}$ in.
From 50 to 70 ft.	$4 \times 3\frac{1}{2} \times \frac{3}{8}$ in.
From 70 to 90 ft.	$5 \times 3\frac{1}{2} \times \frac{3}{8}$ in.

"In proportioning the flanges of plate girders, one-eighth of the gross area of the web is to be assumed as concentrated at the center of gravity of each flange; or, in other words, after having found the net sectional area required for the tension flange by ignoring the resistance of the web to bending, there is to be subtracted therefrom one-eighth of the gross area of the web plate.

"At the ends of all plate girders there must be sufficient rivets in each flange to transfer properly thereto from the web the total end shear in a distance equal to the effective depth of the girder.

"At the ends of cover plates the spacing of the rivets which attach the covers, for a length equal to at least twice the width thereof, shall be made the minimum used in the flanges.

"Under each end of each plate girder there is to be riveted a bearing plate of proper area and thickness, and thoroughly stiffened so as to distribute the load uniformly over the masonry, said plate being bolted effectively to the latter with due provision for expansion and contraction."

The limiting length of span for sliding bearings is gradually being reduced. While De Pontibus, p. 150, permits a length of 85 ft., the latest practice of Waddell & Hedrick is to adopt roller pedestals for spans as short as 60 ft.

Railroad engineers have different notions about some features of plate girder designing. For instance, while some require, for the sake of ease in laying and replacing ties, that there shall be no rivets in the horizontal legs of the upper flange angles, others insist that even in the shortest spans there shall be a top cover plate extending from end to end of span. The object of this is to distribute the load from the ties over the two angles of the flange, but experience shows that such an arrangement is unnecessary.

When the section of the top flanges of a deck plate girder is too great for two angles, four are used in the form of an I, the edges of the vertical legs being placed in contact. When four of the heaviest angles are insufficient for the section required, additional area is obtained by placing cover plates on the vertical legs of the top flange angles. With this type of flange the upper lateral system can be attached to the lower inner angles so as to avoid placing rivets where their heads would interfere with the wooden ties.

On account of the wide flange angles employed in such girders, it is necessary to place pairs of short intermediate stiffeners between the upper and lower angles of the top flange. Again, great care should be taken to make the main stiffeners bear closely against the flange angles; and I prefer to connect on the outside of the girders the short and the long angles of the main stiffeners by short bent angles in order to stiffen the top flange, especially during transportation.

In respect to the erection of plate girder spans, the most satisfactory, and usually also the cheapest method, is to build a temporary trestle that will carry trains, erect and rivet the entire span on one or more cars, run the latter to the site, jack up the span on previously built cribs near the corners, pull away the car or cars, and lower the span into its place on the piers.

CHAPTER XXXIV

FUNDAMENTAL CONSIDERATIONS IN PLATE GIRDER PRACTICE

By Mr. H. W. Hodge, C.E., Consulting Engineer

I consider a plate girder structure the most desirable and satisfactory design that can be used for railroad structures of 90-ft. span or less, but it is not my judgment that it is desirable to use this type of bridge for spans much longer than this limit, as they become very heavy if used for longer spans and require a large number of cover plates; and I consider that the distribution of chord stresses to various covers is a very uncertain element, as the rivets have such long grips that it is very doubtful if the covers carry anything like uniform values, as we have to assume in making calculations.

For these long spans it is also necessary to keep the depth down to less than economical proportion to enable shipments to be made over the railroads, and this limitation as to depth increases the weight of such girders beyond what they economically should be.

The use of this type of structure for long spans is further limited by the inability to transport and erect same at any distance from the nearest railroad delivery point; and for these reasons I believe that a riveted lattice span properly designed, with box chords and wide diagonals, is a better class of structure for spans much over 90 ft., as it can be made fully as stiff as a plate girder design, and can be shipped "knocked down," which does away with any limitations as to depth, and enables it to be transported to any site for erection.

For spans of 100 ft. or thereabouts, I think that these lattice spans can be made with a pony truss of the one-half through type; but for spans much over 100 ft. I would strongly advocate making a full through-riveted struss design with over-head bracing, as I believe this is by far the most satisfactory type of structure for any span up to 150 ft. or 175 ft., where pin-connected trusses can be used.

As to the calculations for plate girder structures, I would say

that it has been my practice to exclude the web as a factor in carrying the chord stresses, as I believe this is safe practice in view of the uncertain distribution of stresses between webs and chords, and the further uncertainty as to whether all of the cover plates carry equally.

It has also been my practice to place pin-bearing shoes under all plate girder structures over 60 ft. in length, to allow for free deflection without throwing the center of bearing off the center of the pedestals.

CHAPTER XXXV

ESSENTIALS OF PLATE GIRDER DESIGN

By Mr. J. V. W. Reynders, C.E., Superintendent of Bridge and Construction Department, Pennsylvania Steel Company

Length. — Plate girder bridges are generally used for spans between 20 and 100 ft. For shorter spans rolled beams or longitudinal troughs (N. Y. C. R.R.), for longer spans riveted girders with open webs, are as a rule more economical. Some engineers prefer plate girder bridges even up to 120 ft. in length, considering their simple inspection and maintenance in the field of greater importance than the additional original cost.

Another advantage of plate girder bridges is their adaptability to the arrangement of corrugated floors, whether the bridge be square or on a skew; thus they are used sometimes for even greater lengths than 120 ft., even if they have to be shipped in two or more pieces and spliced in the field. Field splices for such heavy girders are not desirable, as the field rivets become very long.

Sometimes shipping regulations of sea-going vessels limit the length of the pieces (as a rule to 30 ft.), in which case even plate girders of moderate length have to be spliced in the field.

Deck. — If there is enough height to place the ties or other flooring on top of the girders, deck construction is preferable.

Through. — Otherwise a through construction with floorbeams and stringers has to be used.

The number of panels of through plate girder bridges should preferably be uneven and their length generally 10 to 15 ft. Rolled beams are used as stringers wherever practicable. The floorbeams should be as deep as possible, keeping their top surface not less than about 2 in. below the bottom of rail. If possible the stringers should be placed on seat angles riveted to the floorbeams, instead of placing them on their bottom flange, so that the stringers do not interfere with the horizontal lateral bracing.

Distance between Girders. — The distance between the two plate girders forming a deck bridge is, as a rule, $6\frac{1}{2}$ ft. (one-half

of the standard distance of center lines for two tracks); in a through bridge the distance will depend on the clearance profile and on the curvature of the track which increases the required clearance not only on account of the curve, but also on account of the inclination of the cars caused by the superelevation of the outer rail.

Depth. — The economical depth of plate girders for heavier loading, like railroads, trolleys (except floorbeams, which are generally much deeper), approximates very closely to the formula $h = \frac{L}{12} + 12$ in., where L = span length. This depth will limit the deflection of the bridge under dead and live loads to about $\frac{1}{1200}$ of the span length. In some extreme cases we find depths of plate girders even for railroad traffic of $\frac{1}{15}$ of the span, which according to a very close formula would cause a deflection of $\frac{L}{12{,}000h} = \frac{1}{800}$ of the span. No objectionable results have been observed in such cases. For very long girders their depth has to be selected with regard to possibilities of shipping instead of economy of construction. Thus we find plate girders of 127 ft. length which are only 10 ft. deep over all; for some railroads even 9 ft. is the greatest depth of girders which they are able to transport.

Section. — In calculating the sections of plate girders, three different methods can be used:

The first is to consider the plate girder as a solid rolled section like a beam, with the moment of resistance of the whole section. This method is mostly used in Europe, and ought to be always used for shallow girders.

The second method considers the plate girder as a truss, the two flanges forming the chords, which are connected by the web plate. In this case it is supposed that the bending moment of the outer forces is taken exclusively by the chords, and the shear by the web plates. This method has the disadvantage to encourage the use of thin web plates as their section is not supposed to resist any bending, and for ordinary purposes (not too shallow plate girders) the shear generally does not call for any thicker web plates than the minimum thickness of the material allowed in the specifications. This method is only a rough approximation to the first method, as certainly the web takes part in the bending of the girder, and therefore takes its share of the bending moment.

The third method is a compromise of the foregoing two in that it considers $\frac{1}{8}$ of the gross section of the web as acting as flange area, which amount simply represents the moment of resistance of the web $= \frac{1}{6}\, bh^2$, where b is its thickness and h effective depth of the girder. To be able to count this as flange area, we have to divide by the depth, and have then $\frac{1}{6}\, bh = \frac{1}{6}$ of the net section, which is approximately equal to $\frac{1}{8}$ of the gross section of the web. It is erroneous to say, as some specifications do, that a certain part of the web area shall be considered in the flange section only in cases where the web plates are not spliced. The web plate ought to be spliced in such a manner as to take its share of the bending, and if so spliced should be considered as helping the flanges resisting the bending moment.

Where the compression flange of a plate girder is stayed continuously, it is customary to make the compressed flange of the same gross section as the tension flange, as long as the unsupported length of the compression flange does not exceed 16 times its width, assuming that the rivet holes weaken the tension flange about in the same proportion as a possible buckling reduces the strength of the compression flange. Some specifications give elaborate rules as to what is to be considered as net section of a flange. It might be well to remember in this connection that some specifications deduct all or a portion of the rivet holes even in the compressed flange. Where the compression flange is stayed continuously, as, for instance, with buckle plates, trough floors, etc., it is sufficient to make its gross section equal to the net section of the tension flange.

Flanges. — The flanges usually consist of angles and horizontal cover plates. Only for heavy girders, or where it is of advantage to reduce the number of the horizontal cover plates (for instance, in heavy floorbeams of highway bridges with solid floor, in order to reduce the thickness of the necessary concrete filling), also two vertical flange plates, in certain bridges even two additional angles in each flange have been used. The width of the plates in each flange is generally the same, only when buckle plates are used the first cover plate is made about 6 in. wider than those resting on top of it, so as to take the connecting rivets of the buckle plates.

The length of cover plates is determined by means of a diagram showing the required flange section at each point. For plate girders with constant effective depth (the distance between centers of gravity of the two flange sections) this diagram will be

simply the diagram of the maximum bending moments measured with a different scale. For floorbeams, for instance, it will be a polygon; for longitudinal deck girders it will be a curve, which in the case of a uniform load becomes a parabola.

This assumption of a parabola is also made in figuring the length of cover plates of deck plate girders for railroad loading, which, however, is an approximation only, as the correct curve is composed of different parabolas. It would be a closer approximation to consider two halves of a parabola with a straight horizontal line of about 0.1 of the span in the middle. This will require somewhat longer cover plates.

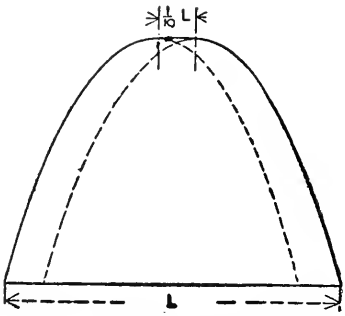

Parabolic Curve for Determining Flange Plates.

Rivets. — In calculating the number of the horizontal rivets connecting the flanges to the web, most specifications prescribe that the vertical girder shear should be transmitted to the flanges in a distance equal to the depth of the girder. This rule is often misunderstood. It can be derived as follows: The horizontal shear per lineal inch at the flanges is equal to the vertical shear at that point, multiplied by the statical moment of the flange area a (which is the part which tends to shear off from the web) about the neutral axis of the whole girder section, divided by the moment of inertia of the whole section; in other words, if we neglect the web plate, and concentrate the flange section in its center of gravity, the horizontal shear per lineal inch is equal to the vertical shear divided by the effective depth h.

$$\text{Horizontal shear per lineal inch} = \frac{\text{Vertical shear} \times \frac{ah}{2}}{2a\left(\frac{h}{2}\right)^2} = \frac{\text{Vertical shear}}{h}.$$

In a flange having also vertical flange plates, the rivets connecting the whole flange to the web have to be properly distributed between the vertical plates and the angles, as either (a), the web and the connected vertical plates can pull out from the angles and cover plates, or (b), the web alone can be severed from the entire flange section.

Bracing. — The two deck plate girders forming a bridge are generally braced horizontally with a triangular system of angles, unless a rigid flooring (buckle plates, troughs, etc.) is used. For spans up to 50 ft. a top bracing is sufficient ; for longer spans a horizontal system at the top and at the bottom is used. Besides these there are vertical cross-frames about every 15 ft.

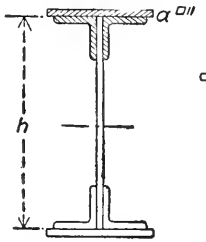

Flange Shear Diagram.

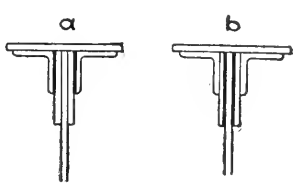

Lines of Possible Shear in Flange Plates and Angles.

In through plate girder bridges there is only a bottom lateral bracing, the floorbeams performing the function of the cross-frames for deck structures. If no end floorbeam is used, a strong end strut will take its place.

Weights. — For single-track railroad bridges with E-40 loading, the following approximate formulæ for the steel weights of plate girder bridges may be used, where L denotes total length of span :

Deck spans = Steel weight per lin. ft., $= 9\,L + 150$ (in. pounds.)

Through spans = Steel weight per lin. ft., $= 11\,L + 400$ (in.-pounds).

For loading E-30 or E-50, the steel weight is respectively about 10 per cent less or more.

I might add to the above that the present tendency to use abnormally long material is in my opinion a mistake. There is probably no shop that is so well suited for long material as ours, but there can be no guarantee that individual carelessness will not occasion permanent injury in handling specially long plates ; and where such injury does not occur in the shop, it is likely to occur in the rolling mills. This is a matter that is rarely taken into account by engineers of railroad companies, but for my part I would rather have a well-designed splice in a plate girder than to run the risk of having material which has been injured through careless handling and subsequent straightening.

Another subject of considerable interest is a proper design of a solid floor bridge. The construction used most frequently at present, made up of plates and angles, is not altogether satisfactory, as it interferes with a proper design of the girder itself.

CHAPTER XXXVI

SOME FEATURES OF PLATE GIRDER CONSTRUCTION

By Mr. John Sterling Deans, C. E., Chief Engineer Phœnix Bridge Company

Within a few years the weights and speed of locomotives and trains have increased so enormously and continually that it has become impossible to secure satisfactory details in short-span lattice girders. The facility of erection of plate girders and their exemption from maintenance and repairs, other than painting, has induced many engineers to increase the use of plate girders structures and increase the length of their spans. On many railroads the limits of plate girder construction are fixed only by the restrictions of weight and clearance for transportation. Girders up to 120 ft. long, 10 ft. deep, and weighing 50 tons may be shipped over nearly all railroads in this country. The maximum ever shipped from our shops was 118 ft. long, 9 feet deep, and weighed 96,000 lbs. Somewhat larger girders might be shipped whole on some railroads, but these would require special cars for their transportation.

As manufacturers, we of course build plate girders to conform to the engineer's designs and specifications; as designers, we recommend the use of plate girders generally for all spans of from 20 to 100 ft., and for exceptional cases up to 110 ft. For ordinary railroad work the live load is assumed to consist of two locomotives with about 46-ft. wheel bases followed by a uniform train load on each track. For heavy work the 225,000-lb. locomotive and tender has four 32,500-lb. axle loads and is followed by a train load of 5000 lbs. per lin. ft. For lighter work the 165,000-lb. locomotive has 30,000-lb. engine axle loads, and is followed by a 3000-lb. train load. Tractive stress is computed by allowing a rail friction coefficient of 0.2 of the maximum live load. Centrifugal force for each train at a speed of 60 ft. per second is assumed equal to 112 $\times$ weight of train in pounds $\div$ radius of curve in feet.

The unit stress in the net cross-section of the tension flange is 10,000 lbs. The gross cross-section of the compression

flange is made equal to that of the tension flange. Shearing stress in web, 6000 lbs ; bearing stress, 16,000 lbs. For shop-driven rivets, shearing and bearing, 9000 and 16,000 lbs. ; for hand-driven rivets, 7000 and 12,500 lbs. ; for bracing rivets, 12,000 and 18,000 lbs.

Live loads for highway bridges are proportioned according to their location. For city and suburban traffic they should provide for 100 lbs. moving load per sq. ft. of total floor area, or for a moving load of 6 tons on two wheels 2½ ft. apart on an axle 11 ft. from another axle carrying 10 tons on two wheels 6 ft. apart. For county highway bridges, 80 lbs. per sq. ft. moving load and 6 tons on two axles 8 ft. apart. For electric railroad structures, a 16-ton car 27 ft. long with a 7-ft. wheel base, or a 20-ton car 27 ft. long with a 7-ft. wheel base. No highway span should be proportioned for a live load of less than 1200 lbs. per lin. ft. The unit stresses for highway spans may be 40 per cent greater in the floor system and 25 per cent greater in the girders than those allowed for railroad spans.

The ends of the girders are designed to transfer the maximum shear to the flange in a distance equal to the depth of the girder. Stiffeners milled to fit the flange angles are located at bearings and points of application of concentrated loads and at intervals about equal to the depth of the girder where the shearing stress is greater than $\frac{12{,}000}{1 + \frac{H^2}{3{,}000}}$ where H is the ratio of depth of web to thickness.

One-sixth of the net area of the web plate is computed to form part of each flange section where details are arranged to make this effective, and the remainder of the flange area is made up as much as possible with two angles, and balance in cover plates. Angles may have, under present conditions, maximum dimensions of 8 × 8 × 1 in. by about 100 ft. long. If the thickness is reduced to about ⅞ in. the length may be increased to about 125 ft. but such extreme dimensions are difficult to get, and cost more per pound from the mill, and cost more in handling in shop. Flange rivets should be staggered where possible, and should not be spaced more than 6 in. apart on each line ; their diameter should not be less than ⅞ in., and the holes should be reamed. In designing flanges it should be borne in mind that thinner metal, say ¾ to ⅞ in. thick, is more reliable than the maximum thicknesses, and it is better to increase number of

plates than to use few excessively thick. Girders 80 ft. long and over should have pin bearings and be supported on rollers at the expansion ends ; shorter spans should have planed sliding plates at the expansion ends. Bed plates may be of cast iron or cast steel, and should reduce the masonry pressure to 300 lbs. per sq. in.

For spans of 80 ft. to 100 ft., plate girders will probably weigh 5 to 15 per cent more than carefully designed lattice girders, but their shop cost is somewhat less per pound, and their rigidity and durability are much greater.

CHAPTER XXXVII

PLATE GIRDER CONSTRUCTION FOR RAILROAD BRIDGES

By Mr. J. B. French, C.E., Bridge Engineer, Atlantic Avenue Improvement Commission Long Island Railroad Co.

The rapid increase in the transportation business of the United States within the last twenty years has demanded heavier engines and equipment of every kind, and correspondingly heavier structures and more solid roadbeds, for all important railroad lines. As a consequence, the weight and tractive power of locomotives and the capacity of freight cars have more than doubled within that period, and practically all the bridge structures on important lines have had to be rebuilt. Millions of dollars have been spent in the renewal of bridge structures alone, and a large proportion of this expenditure has been applied to the substitution of plate girder construction for timber trestles and light lattice and pin-connected trusses, in spans of less than 100 ft. Probably most of the steel structures replaced had been in the track considerably less than twenty years, and their replacement became necessary simply on account of the increased live load that they were called upon to carry. This increase in live load is shown by two specifications written by Theodore Cooper. The first for the Erie Railroad, in 1878, provides for two locomotives with 22,000 lbs. on four driver axles for each, followed by a train load of 2240 lbs. per lin. ft. The second is Cooper's standard E-50 loading, of 1901, and provides for two locomotives each with 50,000 lbs. on each of four axles, followed by a train load of 5000 lbs. per lin. ft.

The Erie loading for 1878 was probably not exceeded for several years after that time, while the latter loading, though somewhat in excess of the average conditions at the present time, is being rapidly approached on the more important lines carrying heavy freight traffic. There are engines in actual service heavier than the E-50 engine, and a train of fifty-ton capacity coal cars, which are liable to be overloaded 10 or 15 per cent, produces a load considerably over 4000 lbs. per lin. ft. of track, and each axle of such cars carries nearly 40,000

lbs., or about double what was specified as the heaviest load on an engine driver axle in 1878.

The bridges of twenty years ago were not only designed for light loads and their members made of light section, but their details were designed without proper regard for stiffness, and little provision was made for future increase in live load. Openings under 100 ft. were usually spanned either by timber stringers or trestles, or by light lattice or pin-connected trusses, comparatively few plate girders being used. The heavy engine loads soon made it necessary to increase the size of timber stringers and produced counter stresses, for which the light trusses had not been calculated. The web members in these trusses were therefore the first to show weakness and had to be reinforced long before the chord members were seriously overstrained. With the heavier loads came also higher speeds, and the lack of stiffness of these light structures became more and more apparent and serious.

When the time arrived for the replacement of these short spans, therefore, the plate girder type of bridge presented itself as particularly well adapted to meet the new requirements. The new bridge could be brought to the site complete on cars, and it was practicable to handle as large members as could be conveniently transported by rail, whereas it is probable that when the old bridge was built the material had to be hauled to the site by teams over bad roads, and the size and weight of the individual parts had to be determined to suit these conditions.

The plate girder also possessed the advantage of being a self-supporting unit as it came from the shop, and it often happened that the new girders could be lowered into place without the use of timber falsework, the old structure furnishing all the support necessary to land the girders on the masonry.

By raising the grade of the track, or, where the necessary underclearance would allow, by cutting down the masonry, it has often been possible to substitute deck plate girder spans for through trusses, and the closer placing of these girders has, in some cases, made it possible to support a new double-track deck plate girder span on masonry built to carry single-track through trusses, by simply changing the wings of the abutments, leaving the piers and bridge seats practically unchanged.

The advantages of plate girders are not, however, limited to their use in the replacement of old structures on established

lines; but, as a result of improved methods of transportation and erection, these advantages apply with at least equal force to their use on new lines designed to carry heavy traffic.

For girders not over 60 ft. long, it is practicable to have the entire span riveted up in the shop, transport it to the site on cars, and by means of a derrick mounted on cars, put the complete span in place on the masonry without the use of falsework, and practically without interrupting the track-laying operations, which under this arrangement could be going on at the same time. For spans from 60 ft. up to 100 ft. long, the delays due to erection, after the new track has been laid to the site, need not exceed two days per span under ordinary conditions, and this delay can be reduced still further where the expense of special erection methods is justified.

Aside from erection considerations the advantages of plate girders are the same on new as on old lines, and may be summarized as follows: *First*, small ratio of depth to span length, making deck construction possible where through structures would otherwise be necessary. The advantages of deck as compared to through construction are very apparent, both as regards the economy of material in both masonry and steelwork, and as regards the safe operation of traffic. By placing the wooden ties directly on top of the girders, no steel stringers or floorbeams are necessary, and as a consequence of the close placing of the girders the bridge seats on both piers and abutments require to be scarcely half as long at right angles to the track as would be required for a through or half-through bridge. A saving of from 25 to 50 per cent of the entire cost of a through bridge can often be accomplished by the substitution of deck construction.

As Regards Safety to Traffic, many accidents have happened to through trusses of the older types by derailed cars, or by projecting parts of improperly loaded freight, striking and wrecking them.

Deck plate girders, however, remove all danger from this class of accidents, and when the timber floors are properly built are practically as safe as an earth embankment. If the timber deck is replaced by a solid ballasted floor we approach still closer to the safety of terra firma.

Second: Advantages from the Maintenance of Way Standpoint. — The simpler the structure and the smaller the number of parts, the more easily is it maintained in good order.

Plate girders are easily inspected and painted, and keep comparatively free from dirt because there are practically no joints or pockets in which dirt or water can collect, or which cannot be inspected by walking over the top of the span.

The absence of adjustable members and all bolts, nuts, and pins reduces the necessity of frequent inspection and prevents ignorant or inexperienced trackmen from "adjusting" the adjustable members in a manner to put them and all the other parts of the structure out of the proper adjustment assumed in their design, as, for instance, when a trackman tightens up the bottom lateral rods of a short span sufficiently to relieve the end panels of the bottom chord under dead load, leaving the eyebars loose on the pins, cases of which have actually happened.

Third: Mill and Shop Considerations which Affect Cost and Quick Delivery. — The great increase in the demand for plate girder construction has been met by a corresponding increase and improvement in the mill and shop facilities for manufacture, and these improved facilities have in turn brought down the price and improved the quality of the material and workmanship, thus still further increasing the demand.

The sizes of plates and angles turned out by the mills have constantly grown larger and larger, and plate girders have consequently been adopted for longer and longer spans, until they are now generally recognized as the best type of construction for all spans from 20 ft. up to 100 ft. long, the upper limit being practically determined by transportation considerations alone.

Standard clearances on most railroads practically limit the depth of long girders carried on ordinary flat cars to an extreme measurement of about 10 ft.; and though girders have been made and shipped that were over 130 ft. long, the difficulties and uncertainties of transportation and erection, the heavy loads which now have to be provided for, and the proper relation of depth to length of span, make 100 ft. extreme length the ordinary limit for plate girder spans under present conditions.

Largely on account of the constant demand, plates and angles of ordinary sizes can usually be had from the mills on shorter notice than any other classes of material; and as ordinary plate girders require practically no machine, forge, or other special shopwork, they can be turned out very rapidly, and the number of shops capable of fabricating them is larger than for any other class of railroad bridge structures.

The Design of Plate Girder Bridges. — Though the specifica-

tions of different engineers have differed considerably in details the resulting construction for the more important railroads has been fairly uniform for bridges to carry heavy traffic. The tendency has been steadily toward heavier loads, simpler details, and heavier and better construction, and engineers and manufacturers have worked together to accomplish these results.

This coöperation has led to what will probably soon be accepted as Standard Specifications for Railroad Bridges, for there appears little doubt that the specifications recommended by the special committee of the American Railway Engineering and Maintenance of Way Association will be accepted, at least as regard raw material, workmanship, and inspection, by most of the large companies either using or manufacturing structural steel work.

The more important railroad companies now design practically all of their own ordinary bridge work, employing engineers with practical experience for that purpose.

Specifications for loads, unit stresses, and details of design, therefore practically become simply instructions for the drawing room of the railroad company's bridge engineer.

The following notes on specifications now in use in our drawing-room in the design of plate girder work, are to be understood from this standpoint, and simply aim to represent good practice in the design of substantial structures to meet the requirements of the present and of the future as far as they can be reasonably anticipated.

Loads.

All structures are to be designed for the following loads:

1st. The weight of the entire structure itself, estimating the weight of rails and fastenings, at 100 lbs. per lin. ft. of track, and lumber at $4\frac{1}{2}$ lbs. per ft. B. M.

2d. A live load on each track of two Cooper's E-50 engines, followed by a uniform load of 5000 lbs. per lin. ft., increased, for the effect of impact, vibration, etc., by an amount derived from the following formula:

$$I = S\left(\frac{300}{L + 300}\right)$$

where I = Effect of impact,
S = Maximum live load stress,
L = Loaded length, of single track, in feet, producing maximum live load stress.

This formula for impact is used for all structures of the ordinary type where the wooden ties rest directly on the steel work, but in the case of the solid reinforced concrete bridge floors, designed to carry full ballasted track, it is considered consistent to reduce the impact sufficiently to carry the extra deadload, so that plate girders carrying solid ballasted floors and not made any heavier in section than if designed to carry the ordinary timber deck.

Wind pressure is assumed at 30 lbs. per sq. ft. for exposed surface of bridge and train, and at 50 lbs. for unloaded bridge. Centrifugal force stress for a train on each track is calculated by the formula.

$$C = .02 \times W \times D \text{ for curvature up to 5 degrees}$$

where $\begin{cases} C = \text{Centrifugal force in pounds.} \\ W = \text{Weight of train in pounds.} \\ D = \text{Degree of curvature.} \end{cases}$

For curves sharper than 5 degrees, reduce the coefficient .02 by 0.001 for each degree over 5.

The eccentricity of the track, when on a curve, must also be considered, as well as the necessary super-elevation of the outer rail, and the girders designed accordingly. The bridge must be so placed in relation to the track as to equalize as far as practicable the proportion of the live load carried by the two girders, but both girders must be made alike and designed to carry the maximum proportion of the live loads which can come on either of them, assuming, for simplicity of calculation, that the relative position of the girders and track at the center of the span is uniform over its whole length.

The above rule will no doubt appear open to criticism as a rude approximation, leaving out of account considerations that have been made the subject of very accurate mathematical analysis. It is to be said in defense of making the inner and outer girders of equal strength, however, that the bridge will undoubtedly be called upon not only to carry passenger trains at a high rate of speed, for which the outer rail will have to be elevated considerably, but will also have to carry much heavier freight trains moving at a slow rate of speed. In the first case the lateral system and the outer girder will receive their heaviest loads, while in the second case the inner girder will probably receive considerably more load than the outer on account of the tilting of the cars due to the super-elevation of the outer rail, and the resulting position

of the center of gravity of the load. The rule errs if at all on the side of safety, and aims to meet the worst possible combination of conditions, while at the same time simplifying construction and probably saving more in shop-cost than the value of the extra metal required.

Unit Stresses and Material.

Maximum unit stresses for live and dead loads and impact are 17,000 lbs. tension, 11,000 lbs. rivet shear, and 22,000 lbs. rivet-bearing. Shear in web plates, 10,000 lbs.

These unit stresses are based on the use of open hearth structural steel, having for all plates and shapes an ultimate strength of from 55,000 to 65,000 lbs. per sq. in.; an elastic limit of not less than 28,000 lbs. per sq. in.

Steel for rivets shall have an ultimate strength of 45,000 to 55,000 lbs. per sq. in.

Low unit stresses and soft steel are to be recommended for ordinary plate girder work for the following reasons:

1st. The modulus of elasticity of the various grades of structural steel is practically uniform, and consequently the larger flange sections obtained by using soft material and low unit stresses reduces deflection and gives stiffer structures.

2d. Structural steel as above defined of uniform and good quality can be readily obtained at the mills, and up to a thickness of $\frac{3}{4}$ in. can be punched and sheared without injury and without the necessity of planing sheared edges or reaming punched holes.

3d. The saving in shop-cost more than makes up for the extra weight of metal used.

Proportion of Parts and Details of Construction. — In all plate girders one-eighth of the gross area of the web plate shall be considered effective in each flange, and web splices shall be designed to resist a corresponding bending moment. The compressed flange shall have the same sectional area as the tension flange, but the unsupported length of flange shall not exceed twelve times its width.

The counting of one-eighth of the web as effective flange area is practically equivalent to including its net moment of inertia after the rivet holes at a splice or stiffener angle have been deducted. Failure to include any part of the web as effective in the flanges is an error on the side of safety. But failure to

design web splices in a way to make effective the resistance which the web plate unquestionably opposes to bending is unscientific and a wasteful use of material. Web splices capable of resisting bending can be made either by using wide splice plates with a sufficient number of rivets near the flanges, or by increasing the flange section at the points where web splices occur. Web splices can frequently be located at the ends of one of the flange or cover plates and the necessary resistance to bending provided by extending the length of this cover plate.

In girders having more than one cover plate the first one on top shall run the full length of the girder, and all cover plates shall be long enough to allow at least two rows of rivets of regular pitch at each end of the plate in addition to those theoretically required. The required length of cover plates for a deck plate girder with ties resting directly on the top flange can be most readily obtained by means of a slide rule from the following formula:

$$l = L\sqrt{\frac{a}{A}}$$

where L = Length of span c. to c. of supports,
A = Net section of flanges at center of span,
a = net section of cover plate or cover plates counting from outside of flange and including net section of plate whose length is sought,
l = length of cover plate sought. This length is to be increased not less than 1 ft. to allow for the extra rivets called for above.

In calculating shearing and bearing stresses on web rivets, the whole of the shear action on the side of any point nearest to the support is to be considered as being transferred into the flange angles in a distance equal to the depth of the girder.

The required pitch of the rivets connecting the flange angles to the web plate can be determined for any point by the following formula:

$$p = d\frac{b}{s}$$

where p = pitch or spacing required,
s = shear at point going to nearest support,
d = depth of girder, between gauge lines,
b = allowable bearing of rivet in web plate.

If p as thus calculated gives spacing too close to comply with the requirements given elsewhere, either the thickness of the web or the size of the flange angle will have to be increased.

No rivets shall be used of greater length than four times their diameter. This requirement is intended to prevent the use of an excessive number of cover plates, and from the standpoint of good shopwork is very important. Rivets with a grip of more than four times their diameter are probably never driven to completely fill the holes, even though they may appear to be perfectly tight. When cut out, such long rivets invariably show that the metal has only been upset for a short distance near each head, and possibly fills the holes at those points, but for the remainder of the distance the shank is practically the same size as before driving. This condition should certainly be avoided if possible.

Stiffener angles shall be riveted to both sides of the web, with a tight bearing against both flanges, at the ends and inner edges of bearing plates, and at all points of concentrated loading; and also, when the thickness of the web is less than $\frac{1}{60}$ of the unsupported distance between flanges, at points throughout the length of the girder, generally not farther apart than the depth of the web plate, with a maximum limit of 5 ft. All stiffeners shall have fillers of the thickness of the chord angles.

End stiffeners shall be proportioned to take up the maximum endshear, and shall have projecting legs as large as the flange angles will allow. The area of the outstanding legs of end stiffeners is to be determined by considering the total endshear carried on this area at a pressure of 17,000 lbs. per sq. in.

All lateral bracing shall be made of angles and designed to resist compression as well as tension. Cross-frames are to be used in all deck spans placed at both ends and at intervals of from 12 to 15 ft. apart, and a bottom lateral system is to be used on all curves sharper than 3 degrees, but not elsewhere.

Spans exceeding 75 ft. in length are to be supported at both ends on hinged bolsters. At the expansion end, this bolster is to rest on steel rollers not less than 3 in. in diameter. The pressure on the roller is not to exceed $1200\sqrt{d}$ (where d = diameter of roller), and the pressure on the masonry under the bed plate is not to exceed 400 lbs. per sq. in. including impact in both cases.

Bed plates under expansion rollers shall preferably be made of railroad rails riveted to a rolled plate not less than $\frac{7}{8}$ in. thick.

For bridges less than 75 ft. in length, one end shall be free to move on planed surfaces, and bed plates shall be at least $\frac{3}{4}$ in. thick.

The use of rollers for expansion should always be coupled with the use of a pin bearing or bolster arrangement for end support; as when the span is long enough to require rollers to facilitate expansion, the deflection under load will be sufficient to load the rollers unequally, unless a pin bearing or other device is introduced to insure a proper distribution of the end reaction.

ALPHABETICAL INDEX OF BRIDGES

PAGE

Albany, simple fixed end bearing 133
Atlantic, description 138
Atlantic Avenue, improvement, description .301
Asylum Street Viaduct, pocket expansion bearings.....148
Armour Avenue, flange bearing pedestals ...158
web and flange splices 226
Atchison, Topeka, & Santa Fé R. R., deflection bearings 204
Apache Cañon Royal Gorge Bridges, description 360

Bridesburg Approach, description 263
Boone Viaduct, description 239
deflection bearing 202
Bradford No. 7, web and flange splices.....226
Bridgeport, pin bearings in riveted fixed shoes 190
Baltimore & Ohio R. R., pin bearings in cast fixed shoes.....188
Boller & Hodge Standards, pin bearings in cast fixed shoes 184
Bethlehem Junction, description..... 66
Bridgeport, description 83
Bengal, description 121
Brooklyn Elevated R. R., standard bearings 134
Bridesburg, description 137
Brooklyn Elevated R. R. Standard, pocket expansion bearings 150
Boller & Hodge, flange bearing pedestals..159
Baltimore & Ohio R. R., flange bearing pedestals 160
pin bearings in cast expansion shoes 168
Boller & Hodge, pin bearings 162
Bethlehem Junction, pin bearings in riveted expansion shoes 175
Benton Boulevard, description 343
Briare Viaduct, description 338

Chew Street Bridge, description 62
Clyde River Bridge, description 95
pin bearings in riveted expansion shoes ..173
Clyde River Bridge, web and flange splices .220
Chicago Terminal Transfer, description 103
pin bearings in riveted fixed shoes 189
Chicago, Milwaukee & St. Paul R. R. Standards 169
pin bearings in riveted fixed shoes..... 195
miscellaneous bearings 212
Canadian Pacific R. R., standards 126
deflection bearings 203
standards, plain roller bearings 155

PAGE

Chicago Elevated R. R. Standards, pocket expansion bearings 151
City Island, pin bearing in riveted expansion shoes 130
pin bearings in riveted fixed shoes 196
Clairton Bridge, pin bearings in cast fixed shoes 185
approaches 265
Chicago Great Western R. R., deflection bearings 202
Chicago Track Elevation.....300
Consolidated Traction, miscellaneous bearings.....210
Croton Bridge, description.....323
Cantilever Spans 341

Des Moines River Viaduct, description 142
Delaware, Lackawanna & Western R. R., Newark, pocket expansion bearings ...149
Detroit Union Depot, pocket expansion bearings 149
track elevation 296
Des Moines River Viaduct, deflection bearings 200

Erie No. 421, description 60
No. 7, description 113
Erie R. R., Standards, simple fixed end bearings 125
plain roller bearings 155
pin bearings in cast expansion shoes 161
No. 7, pin bearings in cast expansion shoes 164
pin bearings in cast expansion shoes 169
pin bearings in cast fixed shoe 187
Eighteen Mile Creek Viaduct, description ..230
simple fixed ends 130
East Omaha Bridge, pin bearings in cast expansion shoes 168

Forest Park, description 63
simple fixed end 127
Fern Hollow, simple fixed end 128
pocket expansion bearings 147
Fraser River, simple fixed ends 133
approach 271
Fort Point.....205
bearings 210
Description 320
Fort Dodge Viaduct 236

Grand Trunk R. R. Bridge 73
Standards, plain roller bearings 155
web and flange splices 218

PAGE
Gokteik Viaduct, construction 148
description 251
Gaspee Street, multiple track bridge 368

Harvard Bridge, description, cantilever span 346
simple fixed end.....128
bearings 207
bearings 212
web and flange splices 216
Hudson River Bridge Approach 286
Highway and Special Spans 316

Janesville, description.....101
deflection bearings.....198
Jersey City Viaduct, simple fixed ends 131

Kinzua Viaduct, pocket expansion bearings 146
web and flange splices 218
description 248
Kansas City Memphis & Fort Scott R. R. Bridges 366

Lebanon Valley, description 71
pin bearings in cast expansion shoes 165
Lehigh River No. 76, web and flange splices 222
Long Highway Spans 318

Marent Gulch, description..... 51
simple fixed ends 129
Maiden Lane, description 106
pin bearings in riveted expansion shoes...173
pin bearings in riveted fixed shoes 193
Manhattan Elevated R. R., pocket expansion bearings 151
Fordham Extension, pocket expansion bearings 152
Mill Creek, simple sliding bearing 142
description 327
Minge Bridge, pin bearings in riveted expansion shoes 171
pin bearings in riveted fixed shoes 192
Merchants Bridge, description 306
Monocacy, description 93

Newark, track elevation 309
description 87
flange bearing pedestal 159
pin bearings in riveted fixed shoes 196
New York Central R. R. Standards, simple fixed end bearings 125
simple sliding ends 136
pin bearings in riveted expansion shoes ..182
No. 454, web and flange splices 223
Northern Pacific Standards, simple fixed end bearings 126
pin bearings in cast expansion shoes 169
pin bearings in riveted expansion shoes ..182
deflection bearings.....203
New York Rapid Transit R. R., deflection bearings 204
Oak Lane, description 51
Oriskany, description 73
simple fixed ends 126
plain roller bearings 154

PAGE
Omaha Bridge, pin bearings in cast fixed shoes 185

Pere Marquette, description 54
Pine Creek, description 116
simple fixed end.....131
pin bearings in riveted expansion shoes...179
web and flange splices 225
Plum Creek, simple fixed end 132
Portage Viaduct, description 243
Port Byron Aqueduct, description 335

Reading Belt Line, description 75
Richmond, pin bearings in riveted expansion shoes 176
Rockford, deflection bearings 199
Riverside Drive, pin bearings in riveted expansion shoes 181
cantilever span description.....351
Riverside Viaduct, description 324
Rankin Bridge, web and flange splices 225
approach, description 260

Ship Pond Stream, description 76
Sixteen Mile Creek, description 86
web and flange splices 220
Streets Run Viaduct, description 141
Suburban Rapid Transit Elevated R. R., pocket expansion bearings 151
Southwestern Avenue Boulevard, pin bearings in cast fixed shoes 186
description 292
St. Louis, Keokuk & Northwestern, cantilever span, description 357

Traction Co.'s Crossing, description 143
Terre Haute, bearings 214

Union Pacific Standards.....136
flange bearing pedestals 160
pin bearings in riveted expansion shoes ..122
pin bearings in riveted fixed shoes.....196
Uganda Viaducts, description 233

Vernon Avenue, deflection bearings 201
Van Buren Street Bridge, Chicago, cantilever span description 341

Woodsville, description..... 55
simple fixed end.....129
Wanda, description 57
Worden, description 81
pin bearings in riveted expansion shoes ..177
web and flange splices 219
West Shore Bridge No. 454, description ...110
pin bearings in riveted fixed shoes 190
Williamsburg Bridge, simple sliding ends ..137
approaches 282
pocket expansion bearings 146
Wabash, deflection bearings 203
description 321
Wellsville Bridge, description 369

Yellow Creek, description 99
pin bearings in riveted fixed shoes 190

DUE DATE

JUN 0 8 1991			
NOV 0 [illegible]			
[illegible]			
[illegible]			
MAR 8 1992			
	201-6503		Printed in USA

WELLS BINDERY INC.
WALTHAM, MASS.
FEB. 1968

TG 315.S6 v2
3 9358 00158602 0

TG315
S6
v.2

Skinner, Frank Woodward, 1858-
Types and details of bridge construction, by Frank W. Skinner. New York, McGraw, 1904-
v. illus. 25 cm.

TG 315.S6 v2
3 9358 00158602 0